COUNTY OF SAN MATEO - PLANNING AND BUILDING DEPARTMENT

ATTACHMENT B

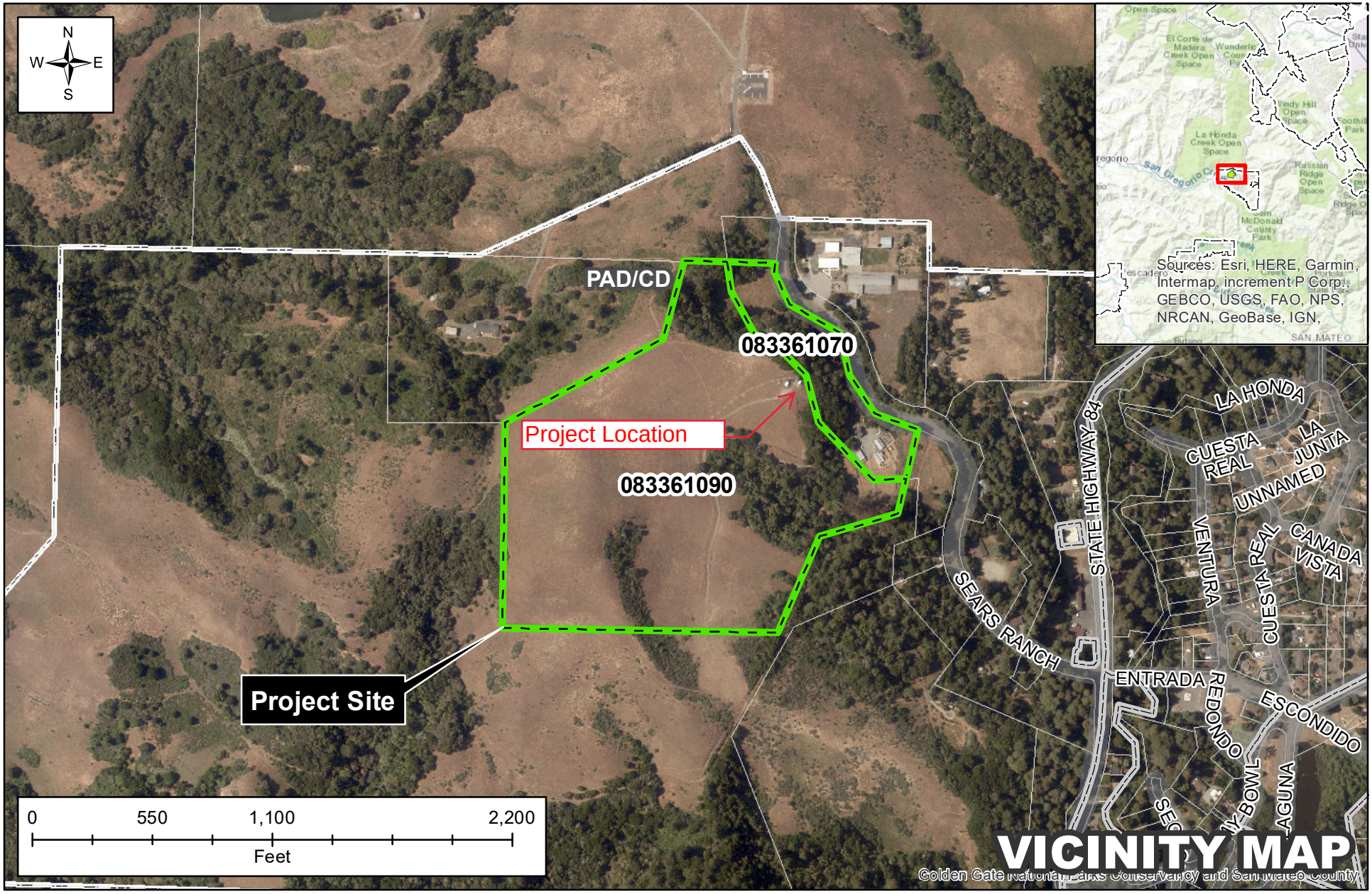
N
W
E
S
PAD/CD
083361070
Project Location
083361090
Project Site
0
550
1,100
2,200
Feet
STATE HIGHWAY 84
SEARS RANCH
LA HONDA
CUESTA REAL
LA JUNTA
UNNAMED
VENTURA
CUESTA REAL
CANADA VISTA
ENTRADA
REDONDO
ESCONDIDO
BOWL
AGUNA
Sources: Esri, HERE, Garmin, Intermap, increment P Corp., GEBCO, USGS, FAO, NPS, NRCAN, GeoBase, IGN,
VICINITY MAP
Golden Gate National Parks Conservancy and San Mateo County

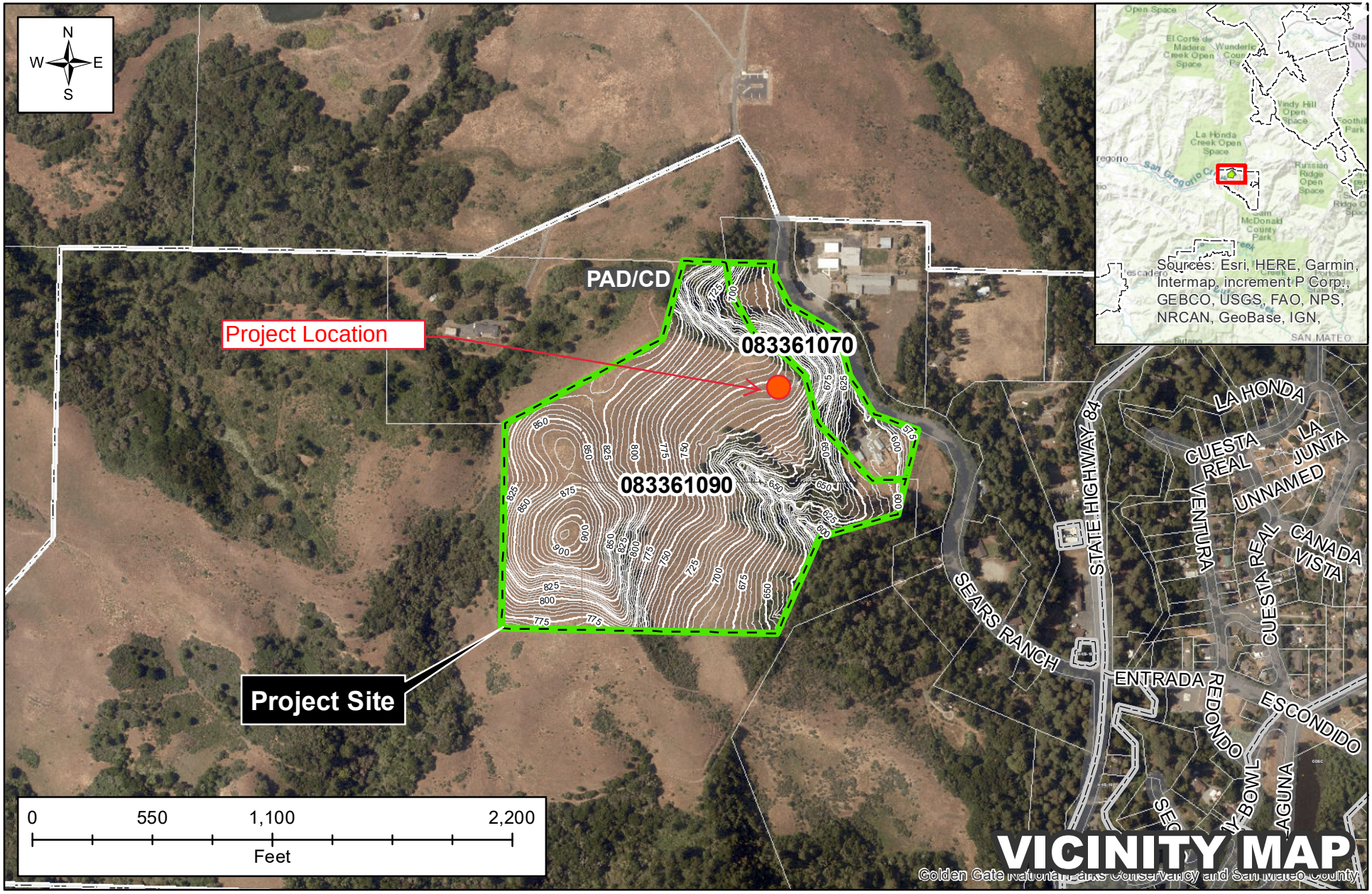

VICINITY MAP

Golden Gate National Parks Conservancy and San Mateo County

COUNTY OF SAN MATEO - PLANNING AND BUILDING DEPARTMENT

ATTACHMENT C

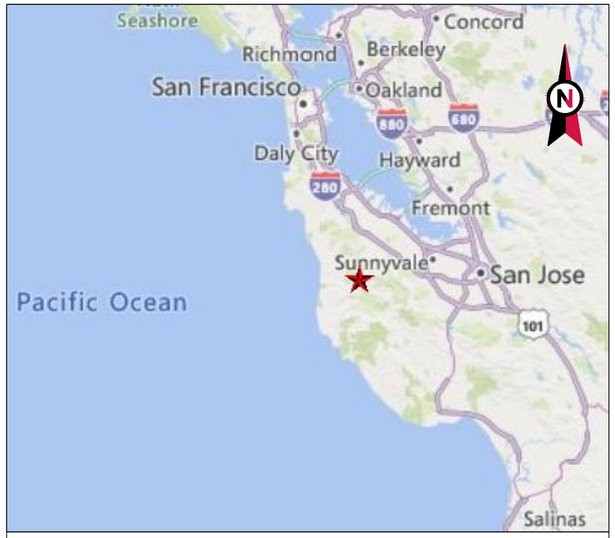

VICINITY MAP

AMERICAN TOWER®

SITE NAME: LA HONDA CA
SITE NUMBER: 414615
SITE ADDRESS: 415 SEARS RANCH RD.
LA HONDA, CA 94020

LOCATION MAP

CONDITIONAL USE PERMIT RENEWAL

COMPLIANCE CODE

ALL WORK SHALL BE PERFORMED AND MATERIALS INSTALLED IN ACCORDANCE WITH THE CURRENT EDITIONS OF THE FOLLOWING CODES AS ADOPTED BY THE LOCAL GOVERNMENT AUTHORITIES. NOTHING IN THESE PLANS IS TO BE CONSTRUED TO PERMIT WORK NOT CONFORMING TO THESE CODES.

1. 2019 CALIFORNIA ADMINISTRATIVE CODE
2. 2019 CALIFORNIA BUILDING CODE
3. 2019 CALIFORNIA RESIDENTAL CODE
4. 2019 CALIFORNIA ELECTRICAL CODE
5. 2019 CALIFORNIA PLUMBING CODE
6. 2019 CALIFORNIA ENERGY CODE
7. 2019 CALIFORNIA FIRE CODE
8. 2019 CALIFORNIA EXISTING BUILDING CODE
9. 2018 INTERNATIONAL BUILDING CODE (IBC)
10. NATIONAL ELECTRIC CODE (NEC)
11. LOCAL BUILDING CODE
12. CITY/COUNTY ORDINANCES

UTILITY COMPANIES

POWER COMPANY: PACIFIC GAS AND ELECTRIC
PHONE: (800) 743-5000

TELEPHONE COMPANY: AT&T
PHONE: (800) 221-0000

811
Know what's **below.**
Call before you dig.

PROJECT SUMMARY

SITE ADDRESS:

415 SEARS RANCH RD.
LA HONDA, CA 94020
COUNTY: SAN MATEO

GEOGRAPHIC COORDINATES:

LATITUDE: 37.322628

LONGITUDE: -122.279183

GROUND ELEVATION: 730' AMSL

ZONING INFORMATION:

JURISDICTION: SAN MATEO COUNTY

PARCEL NUMBER: 083-361-090

PROJECT TEAM

TOWER OWNER:

ATC SEQUOIA LLC
10 PRESIDENTIAL WAY
WOBURN, MA 01801

PROPERTY OWNER:

STEVE WILSON
415 SEARS RANCH RD.
LA HONDA, CA 94020

ENGINEER:

ATC TOWER SERVICES
3500 REGENCY PARKWAY SUITE 100
CARY, NC 27518

AGENT:

BONNIE BELAIR
ATTORNEY, AMERICAN TOWER
10 PRESIDENTIAL WAY
WOBURN, MA 01801

PROJECT DESCRIPTION

THIS SUBMITTAL IS FOR RE-PERMITTING WITH SAN MATEO COUNTY. THIS SET OF DRAWINGS IS INTENDED TO DEPICT EXISTING SITE CONDITIONS. NO CHANGES TO EXISTING ARE PROPOSED.

PROJECT NOTES

1. THE FACILITY IS UNMANNED.
2. A TECHNICIAN WILL VISIT THE SITE APPROXIMATELY ONCE A MONTH FOR ROUTINE INSPECTION AND MAINTENANCE.
3. EXISTING FACILITY MEETS OR EXCEEDS ALL FAA AND FCC REGULATORY REQUIREMENTS.
4. THE PROJECT WILL NOT RESULT IN ANY SIGNIFICANT LAND DISTURBANCE OR EFFECT OF STORM WATER DRAINAGE.
5. NO SANITARY SEWER, POTABLE WATER OR TRASH DISPOSAL IS REQUIRED.
6. HANDICAP ACCESS IS NOT REQUIRED.

PROJECT LOCATION DIRECTIONS

MERGE ONTO I-380 W VIA EXIT 423B TOWARD I-280/SAN BRUNO.MERGE ONTO I-280 S/JUNIPERO SERRA FWY S VIA EXIT 5B ON THE LEFT TOWARD SAN JOSE.TAKE THE CA-35 EXIT, EXIT 35, TOWARD CA-92 W/HALF MOON BAY/BUNKER HILL DR.MERGE ONTO STATE ROUTE 35.STATE ROUTE 35 BECOMES SKYLINE BLVD.TURN RIGHT ONTO CA-35/CA-92/HALF MOON BAY RD.TURN LEFT ONTO CA-35/SKYLINE BLVD.TURN SHARP RIGHT ONTO LA HONDA RD/CA-84.TURN RIGHT ONTO SEARS RA

SHEET INDEX

SHEET NO:	DESCRIPTION:	REV:	DATE:	BY:
G-001	TITLE SHEET	A	08/11/20	JY
C-101	OVERALL SITE PLAN	A	08/11/20	JY
C-102	DETAILED SITE PLAN & TOWER ELEVATION	A	08/11/20	JY
C-501	SIGNAGE	A	08/11/20	JY

AMERICAN TOWER®
ATC TOWER SERVICES, LLC
3500 REGENCY PARKWAY
SUITE 100
CARY, NC 27518
PHONE: (919) 468-0112

REV.	DESCRIPTION	BY	DATE
A	PRELIM	JY	08/11/20

ATC SITE NUMBER:
414615

ATC SITE NAME:
LA HONDA CA

SITE ADDRESS:
415 SEARS RANCH RD.
LA HONDA, CA 94020

SEAL:

PRELIMINARY: NOT FOR CONSTRUCTION

DATE DRAWN:	08/11/20
ATC JOB NO:	13317149_E1

TITLE SHEET

SHEET NUMBER:	REVISION:
G-001	A

NOTES:
1. THIS SET OF DRAWINGS IS INTENDED TO DEPICT EXISTING SITE CONDITIONS ONLY. THE PROJECT WILL NOT RESULT IN ANY PROPOSED WORK.
2. BOUNDARY INFORMATION OBTAINED FROM: DATATREE ONLINE GIS

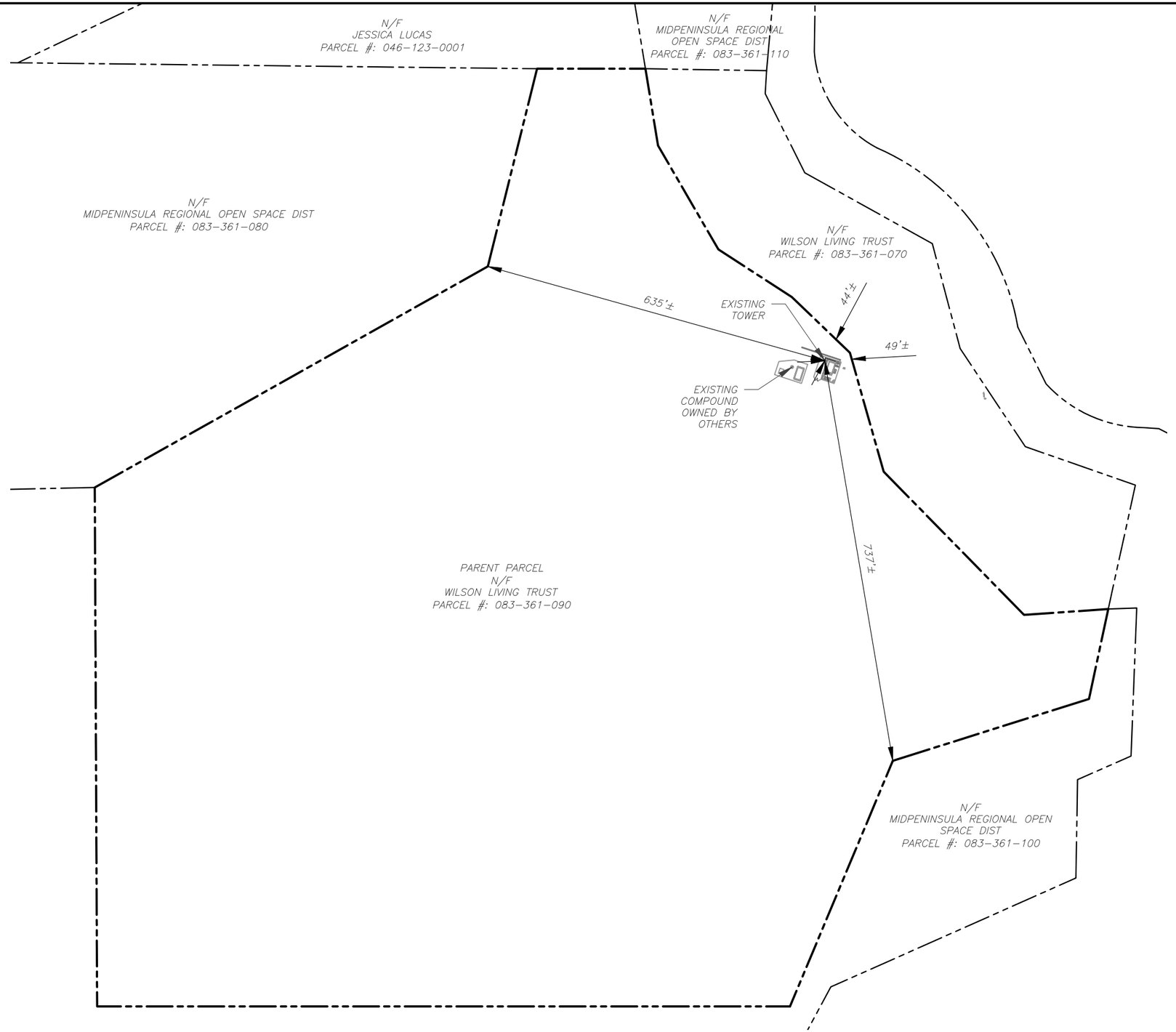

SURVEY LEGEND

- EXISTING PROPERTY
- EXISTING ADJ. PROPERTY
- EXISTING CHAINLINK FENCE
- EXISTING BUILDING

1 OVERALL SITE PLAN

0 200' 400'

SCALE: 1"=200' (11X17)
1"=100' (22X34)

N

AMERICAN TOWER®
ATC TOWER SERVICES, LLC
3500 REGENCY PARKWAY
SUITE 100
CARY, NC 27518
PHONE: (919) 468-0112

REV.	DESCRIPTION	BY	DATE
A	PRELIM	JY	08/11/20

ATC SITE NUMBER:
414615

ATC SITE NAME:
LA HONDA CA

SITE ADDRESS:
415 SEARS RANCH RD.
LA HONDA, CA 94020

SEAL:

PRELIMINARY: NOT FOR CONSTRUCTION

DATE DRAWN:	08/11/20
ATC JOB NO:	13317149_E1

OVERALL SITE PLAN

SHEET NUMBER:	REVISION:
C-101	A

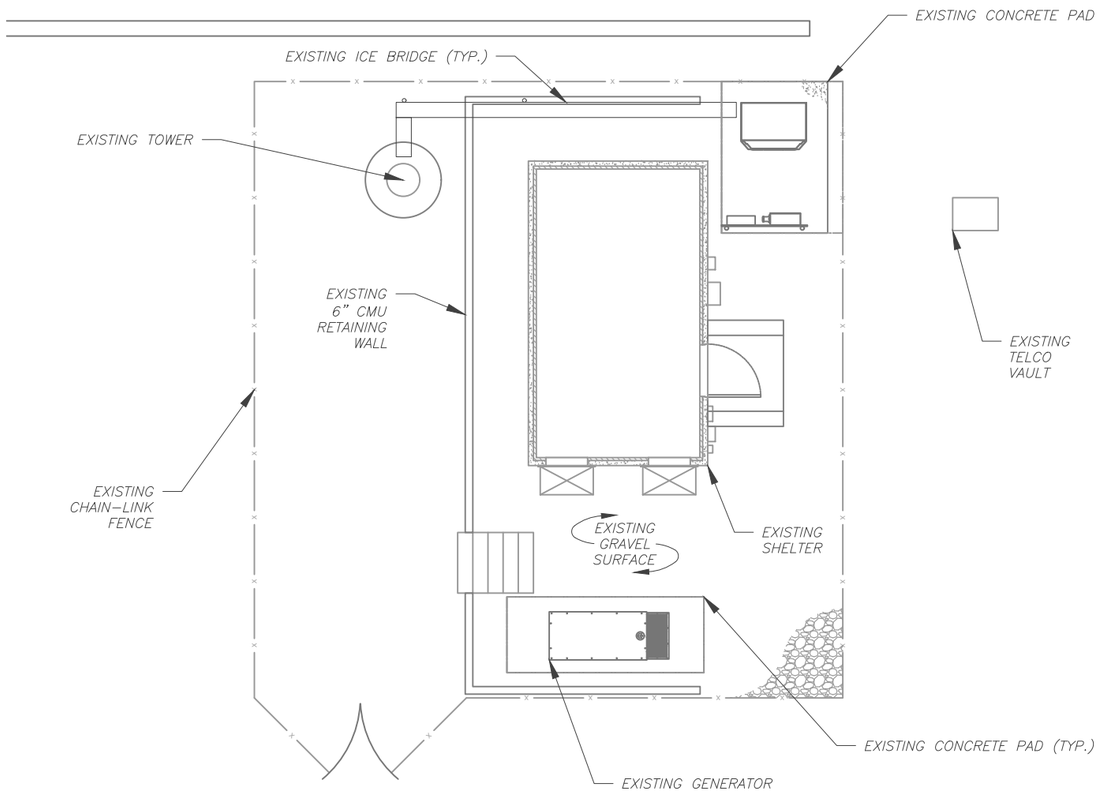

1 DETAILED SITE PLAN

0 10' 20'

SCALE: 1"=10' (11X17)
1"=5' (22X34)

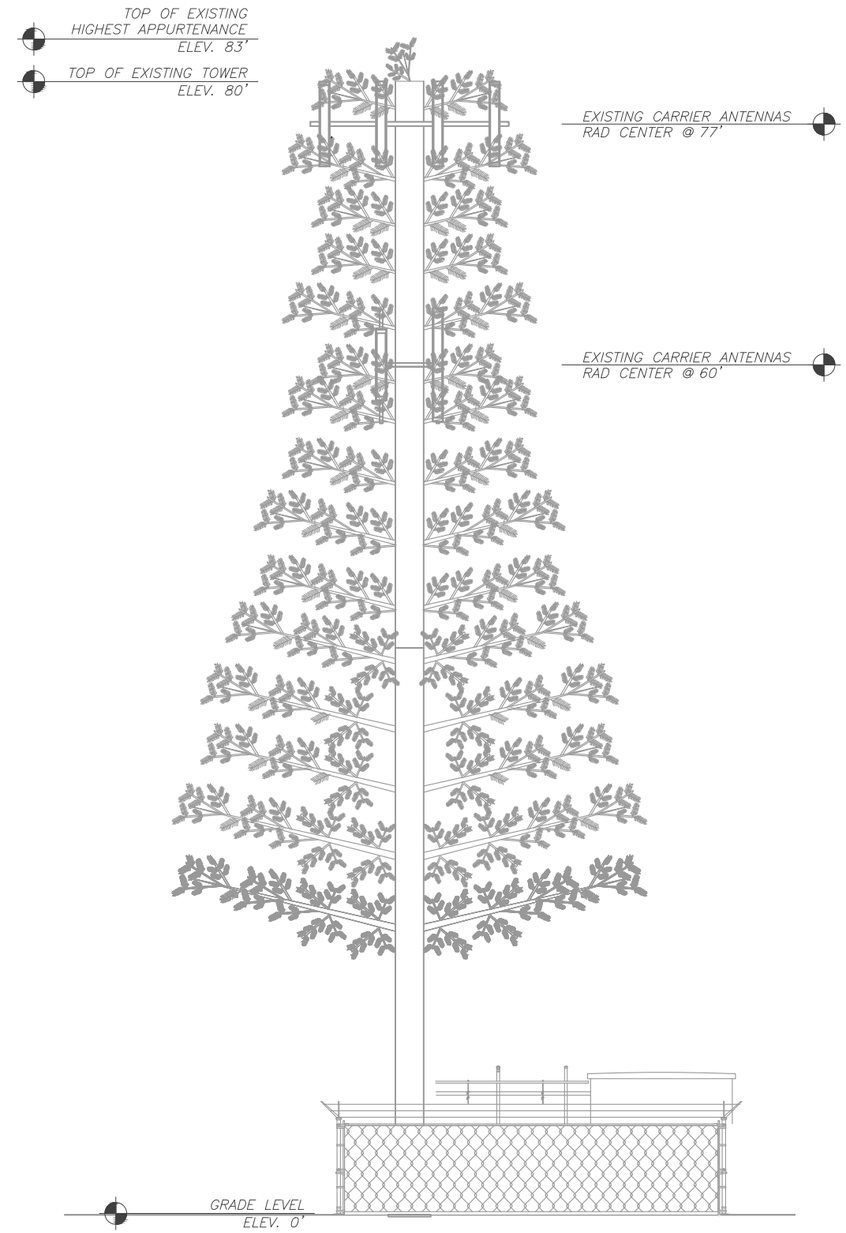

2 TOWER ELEVATION

SCALE: NOT TO SCALE

AMERICAN TOWER®
ATC TOWER SERVICES, LLC
3500 REGENCY PARKWAY
SUITE 100
CARY, NC 27518
PHONE: (919) 468-0112

REV.	DESCRIPTION	BY	DATE
A	PRELIM	JY	08/11/20

ATC SITE NUMBER:
414615

ATC SITE NAME:
LA HONDA CA

SITE ADDRESS:
415 SEARS RANCH RD.
LA HONDA, CA 94020

SEAL:

PRELIMINARY: NOT FOR CONSTRUCTION

DATE DRAWN:	08/11/20
ATC JOB NO:	13317149_E1

DETAILED SITE PLAN & TOWER ELEVATION

SHEET NUMBER:	REVISION:
C-102	A

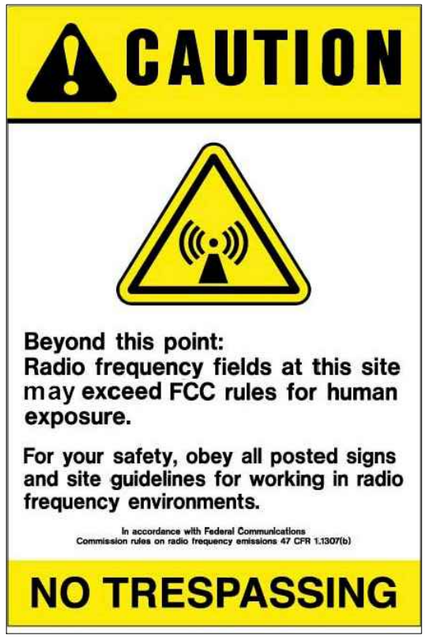

ATC CAUTION AND NO TRESPASSING SIGN

ATC RF WARNING AND FCC NUMBER SIGN

FCC TOWER REGISTRATION #

Posting of sign required by law

ATC STAND-ALONE FCC TOWER REGISTRATION SIGN

EXISTING SIGNAGE PHOTO

NOTICE

GUIDELINES FOR WORKING IN RADIOFREQUENCY ENVIRONMENTS

- All personnel should have electromagnetic energy (EME) awareness training.
- All personnel entering this site must be authorized.
- Obey all posted signs.
- Assume all antennas are active.
- Before working on antennas, notify owners and disable appropriate transmitters.
- Maintain minimum 3 feet clearance from all antennas.
- Do not stop in front of antennas.
- Use personal RF monitors while working near antennas.
- Never operate transmitters without shields during normal operation.
- Do not operate base station antennas in equipment room.

ATC RF PROGRAM NOTICE SIGN

A "NO TRESPASSING" SIGN MUST BE POSTED A MINIMUM OF EVERY 50'.

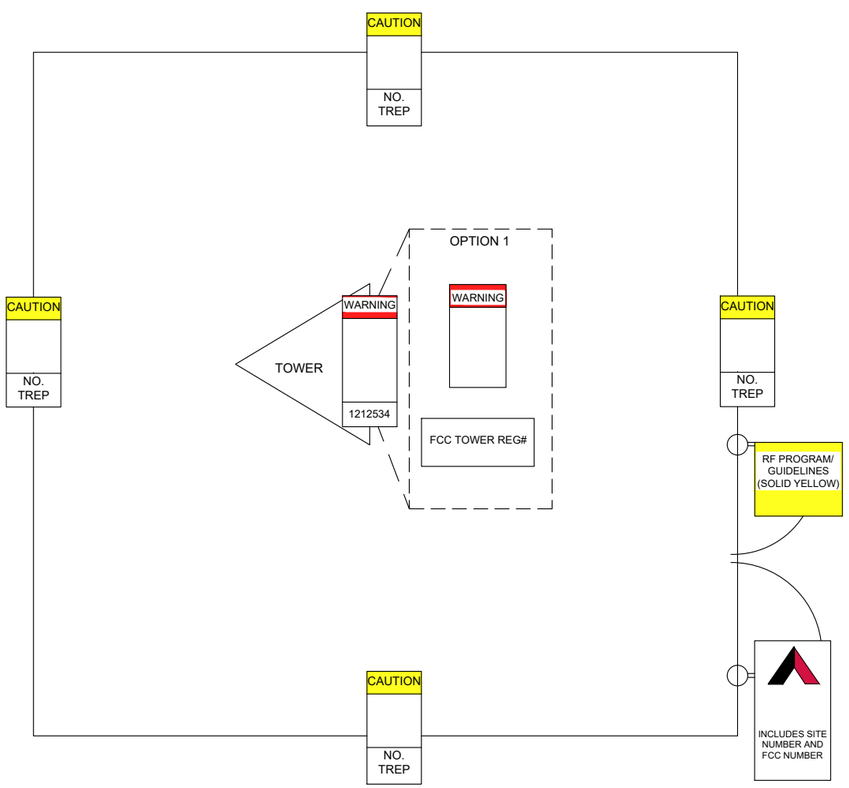

THERE MUST BE AN ATC SIGN WITH SITE INFORMATION AND FCC REGISTRATION NUMBER AT BOTH THE ACCESS ROAD GATE (GATE OFF OF MAIN ROAD, IF APPLICABLE) AND COMPOUND FENCE (IF NO COMPOUND FENCE, THEN IN A CONSPICUOUS PLACE UPON DRIVE UP). IN ADDITION, PLEASE LOOK AT DIAGRAM FOR ALL ADDITIONAL SIGNS REQUIRED.

OPTION 1 MAY BE USED TO POST TOWER REGISTRATION NUMBERS AT THE BASE OF THE TOWER IF A WARNING SIGN DOES NOT HAVE SPACE FOR THE TOWER REGISTRATION NUMBER.

IMPORTANT: FOR ANY ATC SIGN THAT DOES NOT MEET THE ATC SPECIFICATION FOR SIGNAGE (I.E., SHARPIE/PAINT PEN, WORN LABELS, ETC.), BRING IT INTO COMPLIANCE (RE-WRITE IF WORN) AND FLAG FOR REPLACEMENT ASAP WITH THE APPROPRIATE PERMANENT SIGN (YOU CAN ORDER THESE THROUGH THE WAREHOUSE).

ONLY LABELS PRINTED BY A ZEBRA LABEL PRINTER WILL BE ACCEPTED.

AMERICAN TOWER

SITE NAME : LA HONDA CA
SITE NUMBER : 414615
FCC REGISTRATION # :

FOR LEASING INFORMATION:
877-282-7483
877-ATC-SITE

FOR EMERGENCIES CALL:
877-518-6937
877-51-TOWER

NO TRESPASSING

www.americantower.com

POSTING OF THIS SIGNAGE REQUIRED BY LAW

ATC SITE SIGN

REPLACEMENT OF SIGNAGE:

AS SIGNAGE BECOMES STOLEN, DAMAGED, BRITTLE OR FADED, IT SHOULD BE REPLACED WITH SIGNAGE PER THIS SPECIFICATION. ANY ACQUIRED SITE SHOULD HAVE NEW SIGNS POSTED WITHIN 60 DAYS UNLESS OTHERWISE SPECIFIED. ANY SITE SOLD SHOULD HAVE THE ATC SIGNS REMOVED WITHIN 30 DAYS UNLESS OTHERWISE SPECIFIED. ALL FCC OR REGULATORY SIGNAGE MUST BE INSTALLED OR REPLACED AS REQUIRED TO MEET OUR STANDARD. SIGNS SHOULD BE REPLACED ON NORMAL, QUARTERLY MAINTENANCE VISITS BY CONTRACTORS OR SITE MANAGERS, UNLESS OTHERWISE REQUIRED ON A CASE-BY-CASE BASIS.

NOTE:

EXTERIOR SIGNS ARE NOT PROPOSED EXCEPT AS REQUIRED BY THE FCC. ALL EXISTING SIGNAGE AND ANY FUTURE SIGNAGE WILL BE COMPLIANT WITH STATUTE 164-43.4 NO HIGH-VOLTAGE SIGNAGE IS NECESSARY. NO HIGH-VOLTAGE EQUIPMENT PRESENT.

AMERICAN TOWER®
ATC TOWER SERVICES, LLC
3500 REGENCY PARKWAY
SUITE 100
CARY, NC 27518
PHONE: (919) 468-0112

REV.	DESCRIPTION	BY	DATE
A	PRELIM	JY	08/11/20

ATC SITE NUMBER:
414615

ATC SITE NAME:
LA HONDA CA

SITE ADDRESS:
415 SEARS RANCH RD.
LA HONDA, CA 94020

SEAL:

PRELIMINARY: NOT FOR CONSTRUCTION

DATE DRAWN:	08/11/20
ATC JOB NO:	13317149_E1

SIGNAGE

SHEET NUMBER:	REVISION:
C-501	A

COUNTY OF SAN MATEO - PLANNING AND BUILDING DEPARTMENT

ATTACHMENT D

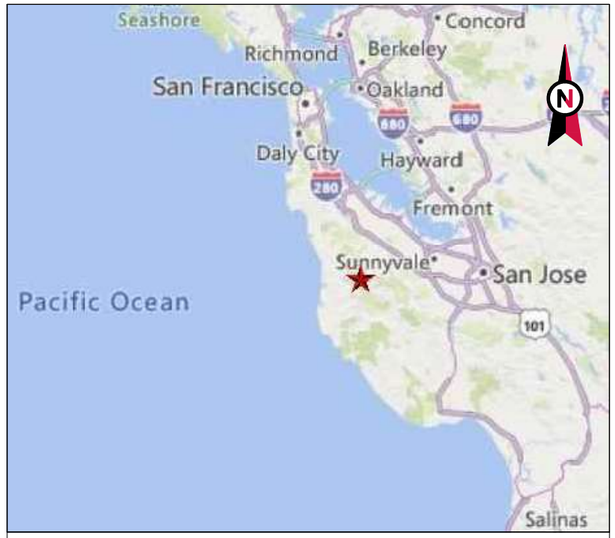

VICINITY MAP

AMERICAN TOWER®

ATC SITE NAME: LA HONDA CA
SITE NUMBER: 414615
SITE ADDRESS: 335 SEARS RANCH RD.
LA HONDA, CA 94020

LOCATION MAP

SHARED GENERATOR PROGRAM
ANCHOR TENANT

COMPLIANCE CODE

ALL WORK SHALL BE PERFORMED AND MATERIALS INSTALLED IN ACCORDANCE WITH THE CURRENT EDITIONS OF THE FOLLOWING CODES AS ADOPTED BY THE LOCAL GOVERNMENT AUTHORITIES. NOTHING IN THESE PLANS IS TO BE CONSTRUED TO PERMIT WORK NOT CONFORMING TO THESE CODES.

1. 2019 CALIFORNIA ADMINISTRATIVE CODE
2. 2019 CALIFORNIA BUILDING CODE
3. 2019 CALIFORNIA RESIDENTAL CODE
4. 2019 CALIFORNIA ELECTRICAL CODE
5. 2019 CALIFORNIA PLUMBING CODE
6. 2019 CALIFORNIA ENERGY CODE
7. 2019 CALIFORNIA FIRE CODE
8. 2019 CALIFORNIA EXISTING BUILDING CODE
9. 2018 INTERNATIONAL BUILDING CODE (IBC)
10. NATIONAL ELECTRIC CODE (NEC)
11. LOCAL BUILDING CODE
12. CITY/COUNTY ORDINANCES

UTILITY COMPANIES

POWER COMPANY: PACIFIC GAS AND ELECTRIC
PHONE: (800) 743-5000

TELEPHONE COMPANY: AT&T
PHONE: (800) 221-0000

811
Know what's below.
Call before you dig.

PROJECT SUMMARY

SITE ADDRESS:

335 SEARS RANCH RD.
LA HONDA, CA 94020
COUNTY: SAN MATEO

GEOGRAPHIC COORDINATES:

LATITUDE: 37.322628

LONGITUDE: -122.279183

GROUND ELEVATION: 730' AMSL

ZONING INFORMATION:

JURISDICTION: SAN MATEO

PARCEL NUMBER: 083-361-090

PROJECT TEAM

ATC REGIONAL NETWORK DEVELOPMENT PROJECT MANAGER:
JENN CASTRO
(949) 447-2302

ATC NETWORK OPERATIONS CENTER:
(877) 518-6937

TOWER OWNER:

AMERICAN TOWER
10 PRESIDENTIAL WAY
WOBURN, MA 01801

PROPERTY OWNER:

STEVEN AND JUDY WILSON
PO BOX 316
LA HONDA, CA 94020

ENGINEERED BY:

ATC TOWER SERVICES
3500 REGENCY PARKWAY SUITE 100
CARY, NC 27518

PROJECT DESCRIPTION

THE PROPOSED PROJECT INSTALLS AN OPTIONAL STANDBY GENERATOR SYSTEM, AUTOMATIC TRANSFER SWITCH, GENERATOR AUXILIARY POWER DISTRIBUTION, AND REMOTE MONITORING COMMUNICATIONS CIRCUITRY FOR A COMMUNICATION TOWER TENANT.

PROJECT NOTES

1. THE FACILITY IS UNMANNED.
2. A TECHNICIAN WILL VISIT THE SITE APPROXIMATELY ONCE A MONTH FOR ROUTINE INSPECTION AND MAINTENANCE.
3. THE PROJECT WILL NOT RESULT IN ANY SIGNIFICANT LAND DISTURBANCE OR EFFECT OF STORM WATER DRAINAGE.
4. NO SANITARY SEWER, POTABLE WATER OR TRASH DISPOSAL IS REQUIRED.
5. HANDICAP ACCESS IS NOT REQUIRED.

PROJECT LOCATION DIRECTIONS

MERGE ONTO I-380 W VIA EXIT 423B TOWARD I-280/SAN BRUNO.MERGE ONTO I-280 S/JUNIPERO SERRA FWY S VIA EXIT 5B ON THE LEFT TOWARD SAN JOSE.TAKE THE CA-35 EXIT, EXIT 35, TOWARD CA-92 W/HALF MOON BAY/BUNKER HILL DR.MERGE ONTO STATE ROUTE 35.STATE ROUTE 35 BECOMES SKYLINE BLVD.TURN RIGHT ONTO CA-35/CA-92/HALF MOON BAY RD.TURN LEFT ONTO CA-35/SKYLINE BLVD.TURN SHARP RIGHT ONTO LA HONDA RD/CA-84.TURN RIGHT ONTO SEARS RA

SHEET INDEX

SHEET NO:	DESCRIPTION:	REV:	DATE:	BY:
G-001	TITLE SHEET	0	02/03/21	DB
G-002	GENERAL NOTES	0	02/03/21	DB
C-001	OVERALL SITE PLAN	0	02/03/21	DB
C-101	SITE PLAN	0	02/03/21	DB
C-501	CONCRETE PAD DETAILS	0	02/03/21	DB
C-502	CONSTRUCTION DETAILS	0	02/03/21	DB
E-601	ELECTRICAL ONE-LINE AND WIRING DETAILS	0	02/03/21	DB
R-601	SUPPLEMENTAL			

AMERICAN TOWER®
ATC TOWER SERVICES, LLC
3500 REGENCY PARKWAY
SUITE 100
CARY, NC 27518
PHONE: (919) 468-0112

REV.	DESCRIPTION	BY	DATE
0	FOR CONSTRUCTION	DB	02/03/21

ATC SITE NUMBER:
414615

ATC SITE NAME:
LA HONDA CA

SITE ADDRESS:
335 SEARS RANCH RD.
LA HONDA, CA 94020

SEAL:

LICENSED PROFESSIONAL ENGINEER
SCOTT ROBERT FLETCHER
C 90765
EXP. 12/31/21
CIVIL
STATE OF CALIFORNIA

Authorized by "Scott Fletcher"
05 Feb 2021 07:17:47

T-Mobile cosign

DRAWN BY:	DB
APPROVED BY:	SRF
DATE DRAWN:	02/03/21
ATC JOB NO:	13335112_M4

TITLE SHEET

SHEET NUMBER: G-001

REVISION: 0

GENERAL CONSTRUCTION NOTES:

1. ALL WORK SHALL CONFORM TO ALL CURRENT APPLICABLE FEDERAL, STATE, AND LOCAL CODES, INCLUDING ANSI/EIA/TIA-222, AND COMPLY WITH ATC CONSTRUCTION SPECIFICATIONS.
2. CONTRACTOR SHALL CONTACT LOCAL 811 FOR IDENTIFICATION OF UNDERGROUND UTILITIES PRIOR TO START OF CONSTRUCTION.
3. CONTRACTOR SHALL BE RESPONSIBLE FOR COORDINATING ALL REQUIRED INSPECTIONS.
4. ALL DIMENSIONS TO, OF, AND ON EXISTING BUILDINGS, DRAINAGE STRUCTURES, AND SITE IMPROVEMENTS SHALL BE VERIFIED IN FIELD BY CONTRACTOR WITH ALL DISCREPANCIES REPORTED TO THE ENGINEER.
5. DO NOT CHANGE SIZE OR SPACING OF STRUCTURAL ELEMENTS.
6. DETAILS SHOWN ARE TYPICAL; SIMILAR DETAILS APPLY TO SIMILAR CONDITIONS UNLESS OTHERWISE NOTED.
7. THESE DRAWINGS DO NOT INCLUDE NECESSARY COMPONENTS FOR CONSTRUCTION SAFETY WHICH SHALL BE THE SOLE RESPONSIBILITY OF THE CONTRACTOR.
8. CONTRACTOR SHALL BRACE STRUCTURES UNTIL ALL STRUCTURAL ELEMENTS NEEDED FOR STABILITY ARE INSTALLED. THESE ELEMENTS ARE AS FOLLOWS: LATERAL BRACING, ANCHOR BOLTS, ETC.
9. CONTRACTOR SHALL DETERMINE EXACT LOCATION OF EXISTING UTILITIES, GROUNDS DRAINS, DRAIN PIPES, VENTS, ETC. BEFORE COMMENCING WORK.
10. INCORRECTLY FABRICATED, DAMAGED, OR OTHERWISE MISFITTING OR NONCONFORMING MATERIALS OR CONDITIONS SHALL BE REPORTED TO THE ATC CM PRIOR TO REMEDIAL OR CORRECTIVE ACTION. ANY SUCH REMEDIAL ACTION SHALL REQUIRE WRITTEN APPROVAL BY THE ATC CM PRIOR TO PROCEEDING.
11. EACH CONTRACTOR SHALL COOPERATE WITH THE ATC CM, AND COORDINATE HIS WORK WITH THE WORK OF OTHERS.
12. CONTRACTOR SHALL REPAIR ANY DAMAGE CAUSED BY CONSTRUCTION OF THIS PROJECT TO MATCH EXISTING PRE-CONSTRUCTION CONDITIONS TO THE SATISFACTION OF THE ATC CONSTRUCTION MANAGER.
13. ALL CABLE/CONDUIT ENTRY/EXIT PORTS SHALL BE WEATHERPROOFED DURING INSTALLATION USING A SILICONE SEALANT.
14. WHERE EXISTING CONDITIONS DO NOT MATCH THOSE SHOWN IN THIS PLAN SET, CONTRACTOR SHALL NOTIFY THE ATC CONSTRUCTION MANAGER IMMEDIATELY.
15. CONTRACTOR SHALL ENSURE ALL SUBCONTRACTORS ARE PROVIDED WITH A COMPLETE AND CURRENT SET OF DRAWINGS AND SPECIFICATIONS FOR THIS PROJECT.
16. CONTRACTOR SHALL REMOVE ALL RUBBISH AND DEBRIS FROM THE SITE AT THE END OF EACH DAY.
17. CONTRACTOR SHALL COORDINATE WORK SCHEDULE WITH LANDLORD AND TAKE PRECAUTIONS TO MINIMIZE IMPACT AND DISRUPTION OF OTHER OCCUPANTS OF THE FACILITY.
18. CONTRACTOR SHALL FURNISH ATC WITH A PDF MARKED UP AS-BUILT SET OF DRAWINGS UPON COMPLETION OF WORK.
19. PRIOR TO SUBMISSION OF BID, CONTRACTOR SHALL COORDINATE WITH ATC CM TO DETERMINE WHAT, IF ANY, ITEMS WILL BE PROVIDED. ALL ITEMS NOT PROVIDED SHALL BE PROVIDED AND INSTALLED BY THE CONTRACTOR. CONTRACTOR WILL INSTALL ALL ITEMS PROVIDED.
20. PRIOR TO SUBMISSION OF BID, CONTRACTOR SHALL COORDINATE WITH ATC CONSTRUCTION MANAGER TO DETERMINE IF ANY PERMITS WILL BE OBTAINED BY ATC. ALL REQUIRED PERMITS NOT OBTAINED BY ATC MUST BE OBTAINED, AND PAID FOR, BY THE CONTRACTOR.
21. CONTRACTOR SHALL INSTALL ALL SITE SIGNAGE IN ACCORDANCE WITH ATC SPECIFICATIONS AND REQUIREMENTS.
22. CONTRACTOR SHALL SUBMIT ALL SHOP DRAWINGS TO ATC FOR REVIEW AND APPROVAL PRIOR TO FABRICATION.
23. ALL EQUIPMENT SHALL BE INSTALLED ACCORDING TO MANUFACTURER'S SPECIFICATIONS AND LOCATED ACCORDING TO ATC SPECIFICATIONS, AND AS SHOWN IN THESE PLANS.
24. THE CONTRACTOR SHALL SUPERVISE AND DIRECT THE PROJECT DESCRIBED HEREIN. THE CONTRACTOR SHALL BE SOLELY RESPONSIBLE FOR ALL THE CONSTRUCTION MEANS, METHODS, TECHNIQUES, SEQUENCES AND PROCEDURES AND FOR COORDINATING ALL PORTIONS OF THE WORK UNDER THE CONTRACT.
25. CONTRACTOR SHALL NOTIFY ATC CM A MINIMUM OF 48 HOURS IN ADVANCE OF POURING CONCRETE OR BACKFILLING ANY UNDERGROUND UTILITIES, FOUNDATIONS OR SEALING ANY WALL, FLOOR OR ROOF PENETRATIONS FOR ENGINEERING REVIEW AND APPROVAL.
26. CONTRACTOR SHALL BE RESPONSIBLE FOR SITE SAFETY INCLUDING COMPLIANCE WITH ALL APPLICABLE OSHA STANDARDS AND RECOMMENDATIONS AND SHALL PROVIDE ALL NECESSARY SAFETY DEVICES INCLUDING PPE AND PPM AND CONSTRUCTION DEVICES SUCH AS WELDING AND FIRE PREVENTION, TEMPORARY SHORING, SCAFFOLDING, TRENCH BOXES/SLOPING, BARRIERS, ETC.
27. THE CONTRACTOR SHALL PROTECT AT HIS OWN EXPENSE, ALL EXISTING FACILITIES AND SUCH OF HIS NEW WORK LIABLE TO INJURY DURING THE CONSTRUCTION PERIOD. ANY DAMAGE CAUSED BY NEGLECT ON THE PART OF THIS CONTRACTOR OR HIS REPRESENTATIVES, OR BY THE ELEMENTS DUE TO NEGLECT ON THE PART OF THIS CONTRACTOR OR HIS REPRESENTATIVES, EITHER TO THE EXISTING WORK, OR TO HIS WORK OR THE WORK OF ANY OTHER CONTRACTOR, SHALL BE REPAIRED AT HIS EXPENSE TO THE OWNER'S SATISFACTION.
28. ALL WORK SHALL BE INSTALLED IN A FIRST CLASS, NEAT AND WORKMANLIKE MANNER BY MECHANICS SKILLED IN THE TRADE INVOLVED. THE QUALITY OF WORKMANSHIP SHALL BE SUBJECT TO THE APPROVAL OF THE ATC CM. ANY WORK FOUND BY THE ATC CM TO BE OF INFERIOR QUALITY AND/OR WORKMANSHIP SHALL BE REPLACED AND/OR REWORKED AT CONTRACTOR EXPENSE UNTIL APPROVAL IS OBTAINED.
29. IN ORDER TO ESTABLISH STANDARDS OF QUALITY AND PERFORMANCE, ALL TYPES OF MATERIALS LISTED HEREINAFTER BY MANUFACTURER'S NAMES AND/OR MANUFACTURER'S CATALOG NUMBER SHALL BE PROVIDED BY THESE MANUFACTURERS AS SPECIFIED.

CONCRETE AND REINFORCING STEEL NOTES:

1. DESIGN AND CONSTRUCTION OF ALL CONCRETE ELEMENTS SHALL CONFORM TO THE LATEST EDITIONS OF ALL APPLICABLE CODES INCLUDING: ACI 301 "SPECIFICATIONS FOR STRUCTURAL CONCRETE FOR BUILDINGS", ACI 117 "SPECIFICATIONS FOR TOLERANCES FOR CONCRETE CONSTRUCTION AND MATERIALS", AND ACI 318 "BUILDING CODE REQUIREMENTS FOR REINFORCED CONCRETE."
2. MIX DESIGN SHALL BE APPROVED BY ATC CM PRIOR TO PLACING CONCRETE.
3. CONCRETE SHALL BE NORMAL WEIGHT, 6 % AIR ENTRAINED (+/- 1.5%) WITH A SLUMP RANGE OF 3-5" AND HAVE A MINIMUM 28-DAY COMPRESSIVE STRENGTH OF 2500 PSI UNLESS OTHERWISE NOTED.
4. THE FOLLOWING MATERIALS SHALL BE USED:

PORTLAND CEMENT:	ASTM C150, TYPE 2
REINFORCEMENT:	ASTM A185, PLAIN STEEL WELDED WIRE FABRIC
REINFORCEMENT BARS:	ASTM A615, GRADE 60, DEFORMED
NORMAL WEIGHT AGGREGATE:	ASTM C33
WATER:	ASTM C 94/C 94M
ADMIXTURES:	
-WATER-REDUCING AGENT:	ASTM C 494/C 494M, TYPE A
-AIR-ENTERING AGENT:	ASTM C 260/C 260M
-SUPERPLASTICIZER:	ASTM C494, TYPE F OR TYPE G
-RETARDING:	ASTM C 494/C 494M, TYPE B

5. MINIMUM CONCRETE COVER FOR REINFORCING STEEL SHALL BE NO LESS THAN 3".
6. A 3/4" CHAMFER SHALL BE PROVIDED AT ALL EXPOSED EDGES OF CONCRETE IN ACCORDANCE WITH ACI 301 SECTION 4.2.4, UNLESS NOTED OTHERWISE.
7. INSTALLATION OF CONCRETE EXPANSION/WEDGE ANCHOR SHALL BE PER MANUFACTURER'S WRITTEN RECOMMENDED PROCEDURE. THE ANCHOR BOLT, DOWEL, OR ROD SHALL CONFORM TO MANUFACTURER'S RECOMMENDATION FOR EMBEDMENT DEPTH OR AS SHOWN ON THE DRAWINGS. NO REBAR SHALL BE CUT WITHOUT PRIOR ATC CM APPROVAL WHEN DRILLING HOLES IN CONCRETE.
8. ADMIXTURES SHALL CONFORM TO THE APPROPRIATE ASTM STANDARD AS REFERENCED IN "METHOD 1" OF ACI 301.
9. DO NOT WELD OR TACK WELD REINFORCING STEEL.
10. ALL DOWELS, ANCHOR BOLTS, EMBEDDED STEEL, ELECTRICAL CONDUITS, PIPE SLEEVES, GROUNDS AND ALL OTHER EMBEDDED ITEMS AND FORMED DETAILS SHALL BE IN PLACE BEFORE START OF CONCRETE PLACEMENT.
11. REINFORCEMENT SHALL BE COLD BENT WHENEVER BENDING IS REQUIRED.
12. DO NOT PLACE CONCRETE IN WATER, ICE, OR ON FROZEN GROUND.
13. DO NOT ALLOW REINFORCEMENT, CONCRETE OR SUBBASE TO FREEZE DURING CONCRETE CURING AND SETTING PERIOD, OR FOR A MINIMUM OF 3 DAYS AFTER PLACEMENT.
14. FOR COLD-WEATHER(ACI 306) AND HOT-WEATHER(ACI 301M) CONCRETE PLACEMENT, CONFORM TO APPLICABLE ACI CODES AND RECOMMENDATIONS. IN EITHER CASE, MATERIALS CONTAINING CHLORIDE, CALCIUM, SALTS, ETC. SHALL NOT BE USED. PROTECT FRESH CONCRETE FROM WEATHER FOR 7 DAYS, MINIMUM.
15. ALL CONCRETE SHALL HAVE A "SMOOTH FORM FINISH."
16. UNLESS OTHERWISE NOTED:
    A. ALL REINFORCING STEEL SHALL BE DEFORMED BARS CONFORMING TO ASTM A615/A 615M/A-996, GRADE 60.
    B. WELDED WIRE FABRIC SHALL CONFORM TO ASTM A185.
17. SPLICING OF REINFORCEMENT IS PERMITTED ONLY AT LOCATIONS SHOWN IN THE CONTRACT DRAWINGS OR AS ACCEPTED BY THE ENGINEER. UNLESS OTHERWISE SHOWN OR NOTED REINFORCING STEEL SHALL BE SPLICED TO DEVELOP ITS FULL TENSILE CAPACITY (CLASS A) IN ACCORDANCE WITH ACI 318.
18. REINFORCING BAR DEVELOPMENT LENGTHS, AS COMPUTED IN ACCORDANCE WITH ACI 318, FORM THE BASIS FOR BAR EMBEDMENT LENGTHS AND BAR SPLICED LENGTHS SHOWN IN THE DRAWINGS. APPLY APPROPRIATE MODIFICATION FACTORS FOR TOP STEEL, BAR SPACING, COVER AND THE LIKE.
19. DETAILING OF REINFORCING STEEL SHALL CONFORM TO "ACI MANUAL OF STANDARD PRACTICE FOR DETAILING REINFORCED CONCRETE STRUCTURES" (ACI 315).
20. ALL SLAB CONSTRUCTION SHALL BE CAST MONOLITHICALLY WITHOUT HORIZONTAL CONSTRUCTION JOINTS, UNLESS SHOWN IN THE CONTRACT DRAWINGS.
21. LOCATION OF ALL CONSTRUCTION JOINTS ARE SUBJECT TO THE REQUIREMENTS OF THE CONTRACT DOCUMENTS, CONFORMANCE WITH ACI 318, AND ACCEPTANCE OF THE ENGINEER. DRAWINGS SHOWING LOCATION OF DETAILS OF THE PROPOSED CONSTRUCTION JOINTS SHALL BE SUBMITTED WITH REINFORCING STEEL PLACEMENT DRAWINGS.
22. SPLICES OF WWF, AT ALL SPLICED EDGES, SHALL BE SUCH THAT THE OVERLAP MEASURED BETWEEN OUTERMOST CROSS WIRES OF EACH FABRIC SHEET IS NOT LESS THAN THE SPACING OF THE CROSS WIRE PLUS 2 INCHES, NOR LESS THAN 6".
23. BAR SUPPORTS SHALL BE ALL-GALVINIZED METAL WITH PLASTIC TIPS.
24. ALL REINFORCEMENT SHALL BE SECURELY TIED IN PLACE TO PREVENT DISPLACEMENT BY CONSTRUCTION TRAFFIC OR CONCRETE. TIE WIRE SHALL BE OF SUFFICIENT STRENGTH FOR INTENDED PURPOSE, BUT NOT LESS THAN NO. 18 GAUGE.
25. SLAB ON GROUND:
    A. COMPACT SUBGRADE AND ENSURE THERE IS PLACE 6" GRAVEL BENEATH SLAB.
    B. PROVIDE VAPOR BARRIER BENEATH SLAB ON GROUND.

STRUCTURAL STEEL NOTES:

1. STRUCTURAL STEEL SHALL CONFORM TO THE LATEST EDITION OF THE AISC "SPECIFICATION FOR THE DESIGN, FABRICATION AND ERECTION OF STRUCTURAL STEEL FOR BUILDINGS."
2. STRUCTURAL STEEL ROLLED SHAPES, PLATES AND BARS SHALL CONFORM TO THE FOLLOWING ASTM DESIGNATIONS:
    A. ASTM A-572, GRADE 50 - ALL W SHAPES, UNLESS NOTED OR A992 OTHERWISE
    B. ASTM A-36 - ALL OTHER ROLLED SHAPES, PLATES AND BARS UNLESS NOTED OTHERWISE.
    C. ASTM A-500, GRADE B - HSS SECTION (SQUARE, RECTANGULAR, AND ROUND)
    D. ASTM A-325, TYPE SC OR N - ALL BOLTS FOR CONNECTING STRUCTURAL MEMBERS
    E. ASTM F-1554 07 - ALL ANCHOR BOLTS, UNLESS NOTED OTHERWISE
3. ALL EXPOSED STRUCTURAL STEEL MEMBERS SHALL BE HOT-DIPPED GALVANIZED AFTER FABRICATION PER ASTM A123. EXPOSED STEEL HARDWARE AND ANCHOR BOLTS SHALL BE GALVANIZED PER ASTM A153 OR B695.
4. ALL FIELD CUT SURFACES, FIELD DRILLED HOLES AND GROUND SURFACES WHERE EXISTING PAINT OR GALVANIZATION REMOVAL WAS REQUIRED SHALL BE REPAIRED WITH (2) BRUSHED COATS OF ZRC GALVILITE COLD GALVANIZING COMPOUND PER ASTM A780 AND MANUFACTURER'S RECOMMENDATIONS.
5. DO NOT DRILL HOLES THROUGH STRUCTURAL STEEL MEMBERS EXCEPT AS SHOWN AND DETAILED ON STRUCTURAL DRAWINGS.
6. CONNECTIONS:
    A. ALL WELDING TO BE PERFORMED BY AWS CERTIFIED WELDERS AND CONDUCTED IN ACCORDANCE WITH THE LATEST EDITION OF THE AWS WELDING CODE D1.1.
    B. ALL WELDS SHALL BE INSPECTED VISUALLY. 25% OF WELDS SHALL BE INSPECTED WITH DYE PENETRANT OR MAGNETIC PARTICLE TO MEET THE ACCEPTANCE CRITERIA OF AWS D1.1. REPAIR ALL WELDS AS NECESSARY.
    C. INSPECTION SHALL BE PERFORMED BY AN AWS CERTIFIED WELD INSPECTOR.
    D. IT IS THE CONTRACTORS RESPONSIBILITY TO PROVIDE BURNING/WELDING PERMITS AS REQUIRED BY LOCAL GOVERNING AUTHORITY AND IF REQUIRED SHALL HAVE FIRE DEPARTMENT DETAIL FOR ANY WELDING ACTIVITY.
    E. ALL ELECTRODES TO BE LOW HYDROGEN, MATCHING FILLER METAL, PER AWS D1.1, UNLESS NOTED OTHERWISE.
    F. MINIMUM WELD SIZE TO BE 0.1875 INCH FILLET WELDS, UNLESS NOTED OTHERWISE.
    G. PRIOR TO FIELD WELDING GALVANIZING MATERIAL, CONTRACTOR SHALL GRIND OFF GALVANIZING ½" BEYOND ALL FIELD WELD SURFACES. AFTER WELD AND WELD INSPECTION IS COMPLETE, REPAIR ALL GROUND AND WELDED SURFACES WITH ZRC GALVILITE COLD GALVANIZING COMPOUND PER ASTM A780 AND MANUFACTURERS RECOMMENDATIONS.

AMERICAN TOWER®
ATC TOWER SERVICES, LLC
3500 REGENCY PARKWAY
SUITE 100
CARY, NC 27518
PHONE: (919) 468-0112

REV.	DESCRIPTION	BY	DATE
0	FOR CONSTRUCTION	DB	02/03/21

ATC SITE NUMBER:
414615

ATC SITE NAME:
LA HONDA CA

SITE ADDRESS:
335 SEARS RANCH RD.
LA HONDA, CA 94020

SEAL:

LICENSED PROFESSIONAL ENGINEER
SCOTT ROBERT FLETCHER
C 90765
EXP. 12/31/21
CIVIL
STATE OF CALIFORNIA

Authorized by "Scott Fletcher"
05 Feb 2021 07:17:47

T-Mobile cosign

DRAWN BY:	DB
APPROVED BY:	SRF
DATE DRAWN:	02/03/21
ATC JOB NO:	13335112_M4

GENERAL NOTES

SHEET NUMBER:	REVISION:
G-002	0

NOTES:

1. BOUNDARY LINES OBTAINED FROM DATATREE ONLINE GIS.

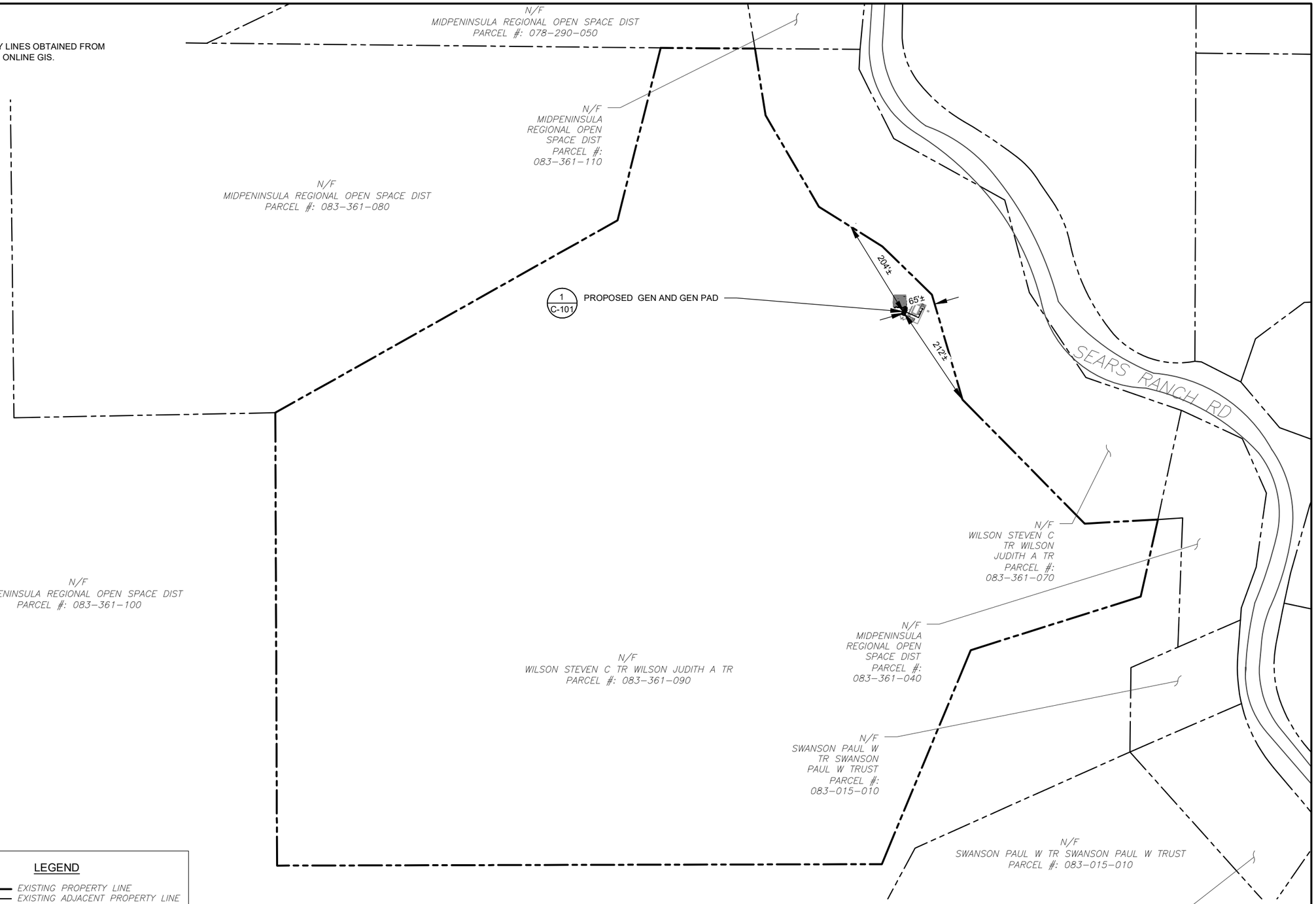

1 OVERALL SITE PLAN

0 100' 200'

SCALE: 1"=100' (11X17)
1"=50' (22X34)

LEGEND

- EXISTING PROPERTY LINE
- EXISTING ADJACENT PROPERTY LINE
- EXISTING LEASE AREA
- EXISTING EASEMENT
- EXISTING WOOD FENCE
- EXISTING WIRE FENCE
- EXISTING METAL FENCE
- EXISTING GUARD RAIL
- EXISTING CHAINLINK FENCE
- EXISTING ROAD (DIRT)
- EXISTING ROAD (STONE)
- EXISTING ROAD (PAVED)

AMERICAN TOWER®
ATC TOWER SERVICES, LLC
3500 REGENCY PARKWAY
SUITE 100
CARY, NC 27518
PHONE: (919) 468-0112

REV.	DESCRIPTION	BY	DATE
0	FOR CONSTRUCTION	DB	02/03/21

ATC SITE NUMBER:

414615

ATC SITE NAME:

LA HONDA CA

SITE ADDRESS:
335 SEARS RANCH RD.
LA HONDA, CA 94020

SEAL:

LICENSED PROFESSIONAL ENGINEER
SCOTT ROBERT FLETCHER
C 90765
EXP. 12/31/21
CIVIL
STATE OF CALIFORNIA

Authorized by "Scott Fletcher"
05 Feb 2021 07:17:47

T-Mobile cosign

DRAWN BY:	DB
APPROVED BY:	SRF
DATE DRAWN:	02/03/21
ATC JOB NO:	13335112_M4

OVERALL SITE PLAN

SHEET NUMBER:	REVISION:
C-001	0

SITE PLAN NOTES:

1. THIS SITE PLAN REPRESENTS THE BEST PRESENT KNOWLEDGE AVAILABLE TO THE ENGINEER AT THE TIME OF THIS DESIGN. THE CONTRACTOR SHALL VISIT THE SITE PRIOR TO CONSTRUCTION AND VERIFY ALL EXISTING CONDITIONS RELATED TO THE SCOPE OF WORK FOR THIS PROJECT.

2. ICE BRIDGE, CABLE LADDER, COAX PORT, AND COAX CABLE ARE SHOWN FOR REFERENCE ONLY. CONTRACTOR SHALL CONFIRM THE EXACT LOCATION OF ALL PROPOSED AND EXISTING EQUIPMENT AND STRUCTURES DEPICTED ON THIS PLAN. BEFORE UTILIZING EXISTING CABLE SUPPORTS, COAX PORTS, INSTALLING NEW PORTS OR ANY OTHER EQUIPMENT, CONTRACTOR SHALL VERIFY ALL ASPECTS OF THE COMPONENTS MEET THE ATC SPECIFICATIONS.

3. IT IS THE RESPONSIBILITY OF THE CONTRACTOR TO COORDINATE WITH THE ATC CONSTRUCTION MANAGER AND LOCAL UTILITY COMPANY FOR THE INSTALLATION OF CONDUITS, CONDUCTORS, BREAKERS, DISCONNECTS, OR ANY OTHER EQUIPMENT REQUIRED FOR ELECTRICAL SERVICE. ALL ELECTRICAL WORK SHALL BE PERFORMED IN ACCORDANCE WITH LATEST EDITION OF THE STATE AND NATIONAL CODES, ORDINANCES AND REGULATIONS APPLICABLE TO THIS PROJECT.

4. CONTRACTOR SHALL INSURE THAT ALL WORKING SPACE REQUIREMENTS ARE MET PER APPLICABLE CODES AND MANUFACTURER SPECIFICATIONS.

5. ABOVE GROUND CONDUITS NEED TO BE SUPPORTED/FASTENED PER NEC 344, NEC 352, AND PER ATC CONSTRUCTION SPECIFICATIONS.

6. THE FOLLOWING SIGNS SHALL BE INSTALLED AT TENANT SERVICE MAIN DISCONNECT PER NEC 702.7.

6.1. "CAUTION: TWO SOURCES OF SUPPLY STANDBY GENERATOR LOCATED OUTDOORS"

6.2. "WARNING: SHOCK HAZARD EXISTS IF GROUNDING ELECTRODE CONDUCTOR OR BONDING JUMPER CONNECTION IN THIS EQUIPMENT IS REMOVED WHILE ALTERNATE SOURCE IS ENERGIZED"

RODENT CONTROL AROUND GENERATOR ENVELOPE:

1. INSTALL ALL PROVIDED SEALS, PLUGS, COVERS, ETC. IN GENERATOR AND FUEL TANK ENVELOPE. SEAL ALL REMAINING OPENINGS (EXCEPT NORMAL VENTING) WITH RODENT FOAM SEALANT. NO OPENING SHALL BE LARGER THAN 1/4 INCH ANY DIMENSION.

2. SEAL ALL CONDUITS INCLUDING CONDUITS ENTERING GENERATOR EQUIPMENT, BOXES, ATTACHMENTS, ETC. WITH RODENT FOAM SEALANT.

3. SEAL ALL CONDUIT ACCESS OPENINGS THROUGH CONCRETE PAD WITH CONCRETE.

4. SLOPE GRAVEL BASE AT CONCRETE PAD PERIMETER FROM ABOVE PAD BASE TO EXISTING GRADE LEVEL TYPICAL ALL PERIMETER SIDES.

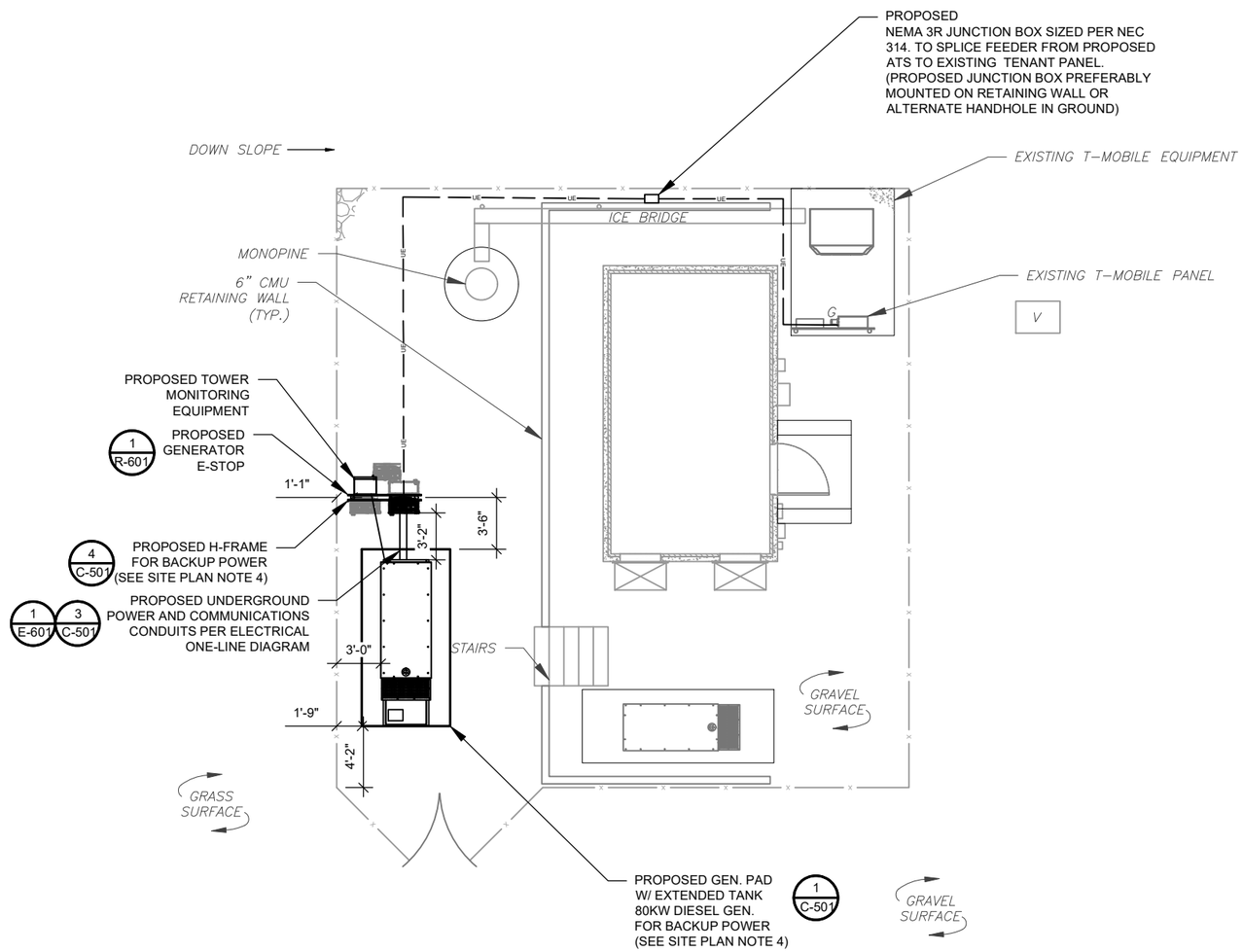

1 DETAILED SITE PLAN

0 10' 20'

SCALE: 1"=10' (11X17)
1"=5' (22X34)

LEGEND

⊗	GROUNDING TEST WELL
ATS	AUTOMATIC TRANSFER SWITCH
B	BOLLARD
CSC	CELL SITE CABINET
D	DISCONNECT
E	ELECTRICAL
F	FIBER
GEN	GENERATOR
G	GENERATOR RECEPTACAL
HH, V	HAND HOLE, VAULT
IB	ICE BRIDGE
K	KENTROX BOX
LC	LIGHTING CONTROL
M	METER
PB	PULL BOX
PP	POWER POLE
T	TELCO
TRN	TRANSFORMER
—— x ——	CHAINLINK FENCE

APPROXIMATE TRENCH DISTANCES	
57'	POWER CONDUIT TRENCH

AMERICAN TOWER®
ATC TOWER SERVICES, LLC
3500 REGENCY PARKWAY
SUITE 100
CARY, NC 27518
PHONE: (919) 468-0112

REV.	DESCRIPTION	BY	DATE
0	FOR CONSTRUCTION	DB	02/03/21

ATC SITE NUMBER:
414615

ATC SITE NAME:
LA HONDA CA

SITE ADDRESS:
335 SEARS RANCH RD.
LA HONDA, CA 94020

SEAL:

LICENSED PROFESSIONAL ENGINEER
SCOTT ROBERT FLETCHER
C 90765
EXP. 12/31/21
CIVIL
STATE OF CALIFORNIA

Authorized by "Scott Fletcher"
05 Feb 2021 07:17:47

T-Mobile cosign

DRAWN BY:	DB
APPROVED BY:	SRF
DATE DRAWN:	02/03/21
ATC JOB NO:	13335112_M4

SITE PLAN

SHEET NUMBER: C-101

REVISION: 0

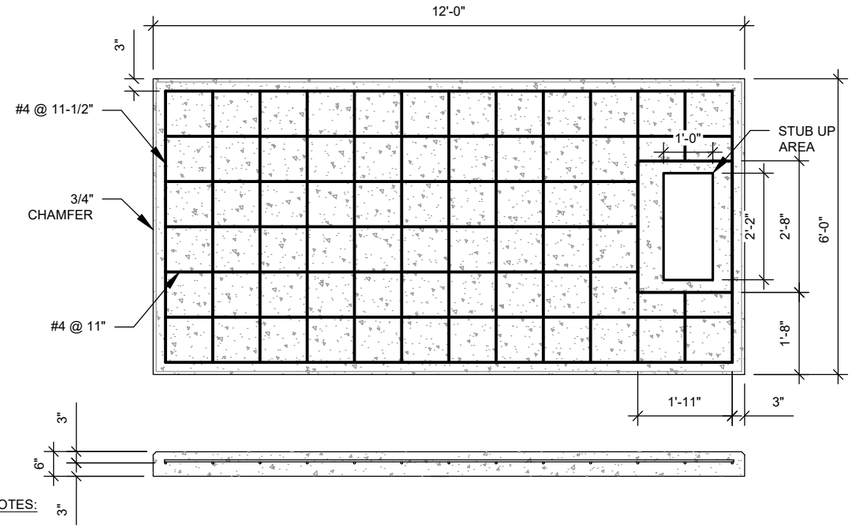

PAD NOTES:

1. PADS SHALL BE PRE-CAST MATCHING THIS DESIGN WHERE ALLOWED BY LOCAL JURISDICTION.
2. PADS SHALL HAVE A MIN 28 DAY COMPRESSIVE STRENGTH AS SPECIFIED ON G-002, CONCRETE AND REINFORCING STEEL NOTES #3
3. REFER TO CONCRETE & REINFORCED STEEL NOTES ON SHEET G-002 & ATC CONSTRUCTION SPECIFICATION 033000 FOR CAST-IN-PLACE PADS.
4. STUB UP AREA SHALL BE FILLED WITH QUIKRETE, OR APPROVED EQUAL, PRIOR TO FINAL SET OF GENERATOR ON PAD.
5. AFTER FINAL SET OF GENERATOR ON PAD, GROUT ALL EXTERIOR OPENINGS AT PAD INTERFACE SO THAT FINISHED MAXIMUM OPENING SHALL BE 1/4 INCH.
6. GROUT SHALL BE PER ATC CONSTRUCTION SPECIFICATION DIVISION 03, CONCRETE.

1 REINFORCED PAD LAYOUT

SCALE: N.T.S.

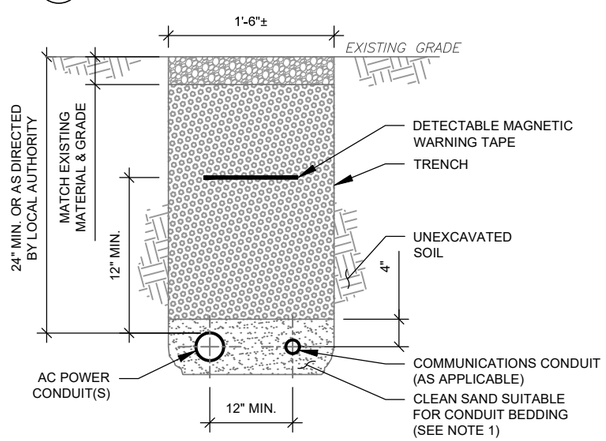

TRENCH NOTES:

1. IF FREE OF ORGANIC OR OTHER DELETERIOUS MATERIAL, EXCAVATED MATERIAL MAY BE USED FOR BACKFILL. IF NOT, PROVIDE CLEAN, COMPACTIBLE MATERIAL.
2. COMPACT IN 8" LIFTS USING A MECHANICAL PLATE TAMPER, MIN 3 PASSES. REMOVE ANY LARGE ROCKS PRIOR TO BACKFILLING. CONTRACTOR TO VERIFY LOCATION OF EXISTING U/G UTILITIES PRIOR TO DIGGING. SEE ATC CONSTRUCTION SPECIFICATION 312000 SECTION 3.15.
3. IF CURRENT AS-BUILT DRAWINGS ARE NOT AVAILABLE CONTRACTOR SHALL HAND DIG U/G TRENCHING.
4. CONFIRM SPACING AND DEPTH WITH NEC OR LOCAL CODE REQUIREMENTS

3 CONDUIT TRENCH DETAILS

SCALE: N.T.S.

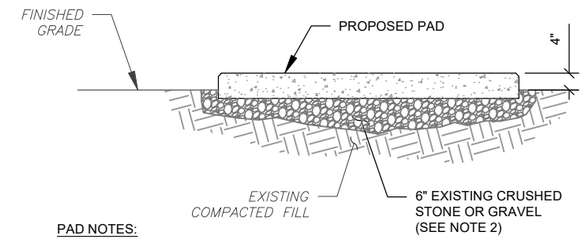

PAD NOTES:

1. SUBGRADE AND FILL SHALL CONSIST OF CLEAN SOIL. DELETRIOUS MATERIAL AND ORGANICS SHALL BE REMOVED.
2. MECHANICALLY COMPACT FOOTPRINT OF PAD PLUS 2' PERIMETER USING A MECHANICAL PLATE TAMPER, MIN 3 PASSES. SEE ATC CONSTRUCTION SPECIFICATION 312000 ACCESS ROAD AND EARTH WORK.
3. USE GALVANIZED HILTI EXPANSION ANCHORS OR, APPROVED EQUAL, FOR EQUIPMENT ANCHORAGE.
4. FOR SIZE AND LOCATION OF ANCHORS AND OTHER REQUIREMENT, SEE EQUIPMENT VENDOR DRAWINGS.

2 GRAVEL PREPARATION

SCALE: N.T.S.

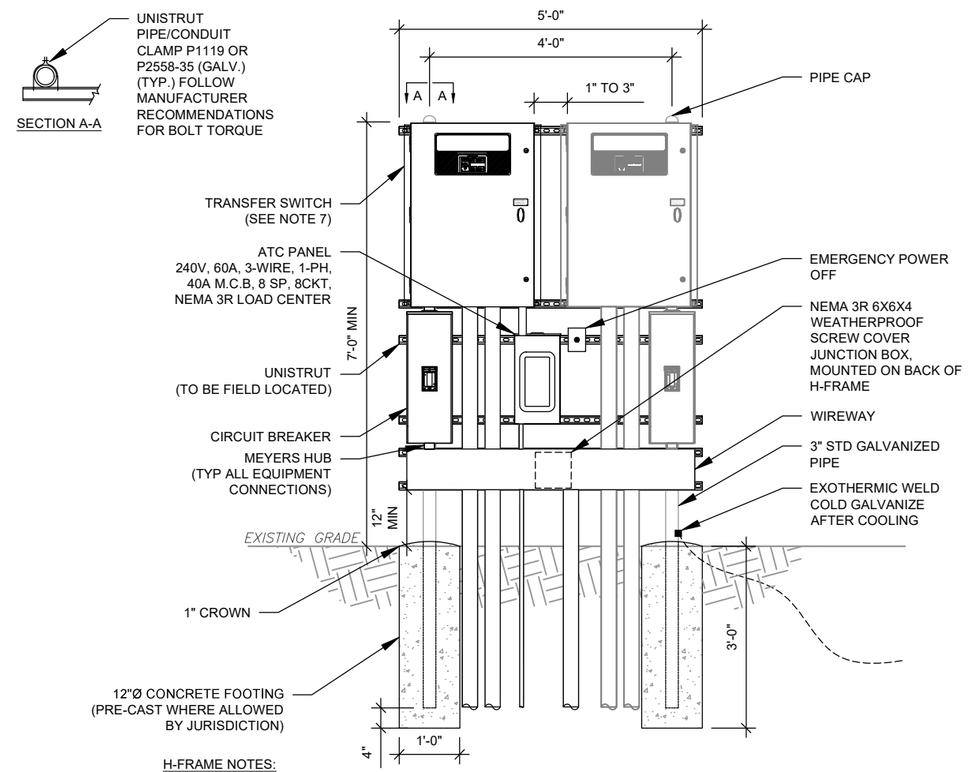

H-FRAME NOTES:

1. IF IT IS NECESSARY TO EXTEND THE H-FRAME, AN ADDITIONAL POST SHALL BE REQUIRED.
2. PROPOSED UNISTRUTS TO BE FIELD CUT AND SHALL NOT EXTEND MORE THAN 6 INCHES BEYOND THE LAST POST.
3. SPRAY ENDS OF UNISTRUT WITH COLD GALVANIZING SPRAY PAINT, ALLOW TO DRY, THEN COVER WITH RUBBER PROTECTIVE CAPS FOR SAFETY.
4. UNISTRUT TO BE CUT FLUSH WITH NO SHARP OR JAGGED EDGES.
5. ALL PROPOSED HARDWARE TO BE MOUNTED AND GROUNDED PER MANUFACTURERS SPECS
6. ALL ITEMS ARE PROPOSED UNLESS OTHERWISE NOTED.
7. LAYOUT H-FRAME & PROPOSED EQUIPMENT EXACTLY AS SHOWN TO ALLOW FOR FUTURE EQUIPMENT. ANY DEVIATIONS MUST BE APPROVED BY ATC CM, IN WRITING, NO EXCEPTIONS.
8. FOOTINGS SHALL BE ONE OF THE FOLLOWING: USS POLECRETE STABILIZER SYSTEM, PRECAST CONCRETE (WHERE ALLOWED BY JURISDICTION) OR CAST IN PLACE. FOR PRECAST FOOTINGS, CONTRACTORS SHALL THOROUGHLY COMPACT THE PERIMETER (2' MIN) OF FOOTING WITH MECHANICAL PLATE TAMPER.

4 H-FRAME

SCALE: N.T.S.

AMERICAN TOWER®
ATC TOWER SERVICES, LLC
3500 REGENCY PARKWAY
SUITE 100
CARY, NC 27518
PHONE: (919) 468-0112

REV.	DESCRIPTION	BY	DATE
0	FOR CONSTRUCTION	DB	02/03/21

ATC SITE NUMBER:

414615

ATC SITE NAME:

LA HONDA CA

SITE ADDRESS:
335 SEARS RANCH RD.
LA HONDA, CA 94020

SEAL:

LICENSED PROFESSIONAL ENGINEER
SCOTT ROBERT FLETCHER
C 90765
EXP. 12/31/21
CIVIL
STATE OF CALIFORNIA

Authorized by "Scott Fletcher"
05\Feb 2021 07:17:47

T-Mobile cosign

DRAWN BY:	DB
APPROVED BY:	SRF
DATE DRAWN:	02/03/21
ATC JOB NO:	13335112_M4

CONCRETE PAD DETAILS

SHEET NUMBER:	REVISION:
C-501	0

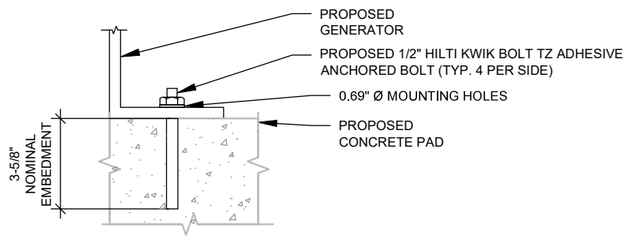

NOTE:

INSTALL HILTI KWIK BOLT TZ ANCHORS STRICTLY PER INSTALLATION INSTRUCTIONS INCLUDED WITH PRODUCT OR FOUND ONLINE AT WWW.US.HILTI.COM. PROPER INSTALLATION IS CRITICAL FOR FULL PERFORMANCE.

1 GENERATOR ATTACHMENT DETAIL

SCALE: NOT TO SCALE

AMERICAN TOWER®
ATC TOWER SERVICES, LLC
3500 REGENCY PARKWAY
SUITE 100
CARY, NC 27518
PHONE: (919) 468-0112

REV.	DESCRIPTION	BY	DATE
0	FOR CONSTRUCTION	DB	02/03/21

ATC SITE NUMBER:
414615

ATC SITE NAME:
LA HONDA CA

SITE ADDRESS:
335 SEARS RANCH RD.
LA HONDA, CA 94020

SEAL:

Authorized by "Scott Fletcher"
05\Feb 2021 07:17:47

DRAWN BY:	DB
APPROVED BY:	SRF
DATE DRAWN:	02/03/21
ATC JOB NO:	13335112_M4

CONSTRUCTION DETAILS

SHEET NUMBER:	REVISION:
C-502	0

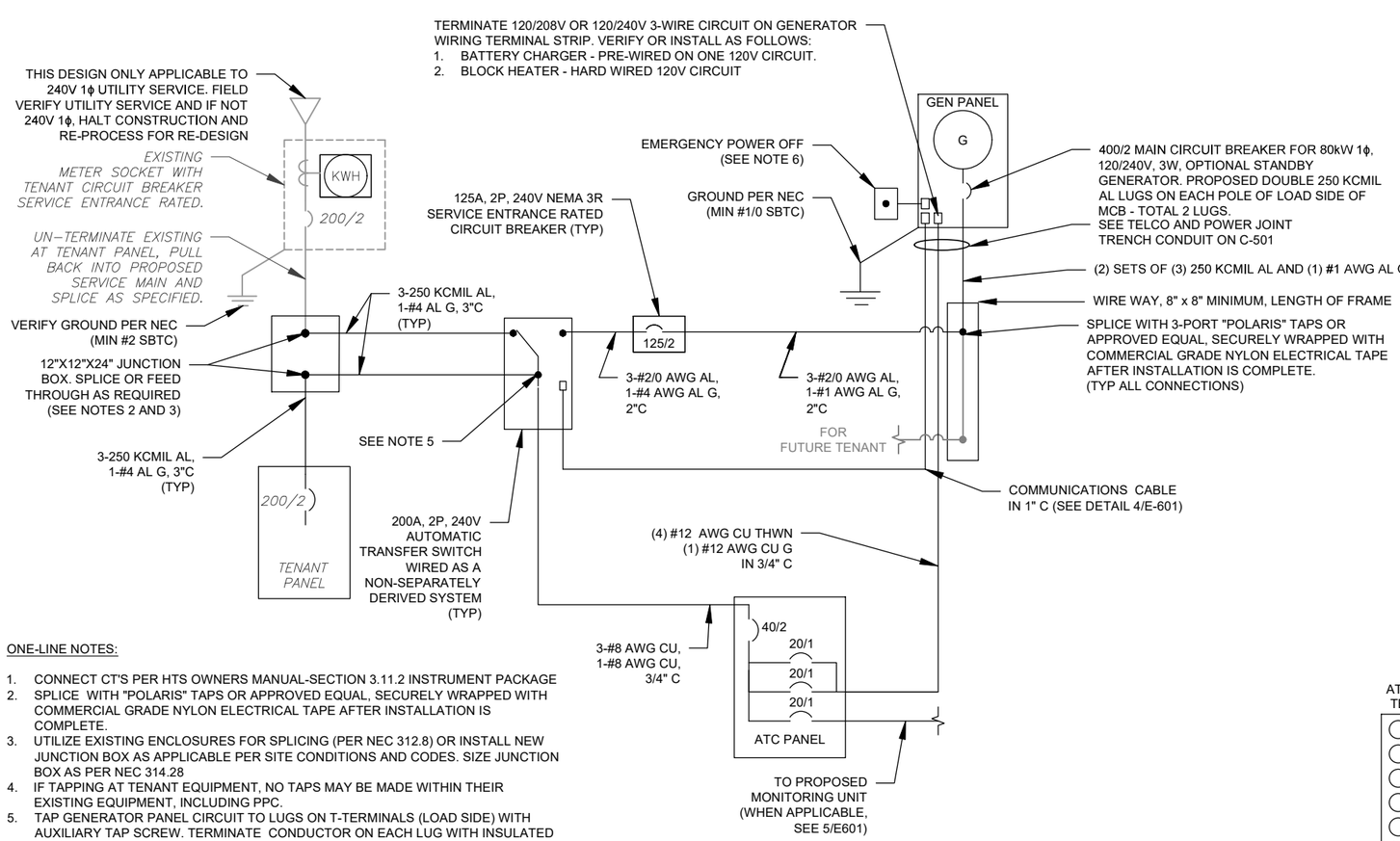

ONE-LINE NOTES:

1. CONNECT CT'S PER HTS OWNERS MANUAL-SECTION 3.11.2 INSTRUMENT PACKAGE
2. SPLICE WITH "POLARIS" TAPS OR APPROVED EQUAL, SECURELY WRAPPED WITH COMMERCIAL GRADE NYLON ELECTRICAL TAPE AFTER INSTALLATION IS COMPLETE.
3. UTILIZE EXISTING ENCLOSURES FOR SPLICING (PER NEC 312.8) OR INSTALL NEW JUNCTION BOX AS APPLICABLE PER SITE CONDITIONS AND CODES. SIZE JUNCTION BOX AS PER NEC 314.28
4. IF TAPPING AT TENANT EQUIPMENT, NO TAPS MAY BE MADE WITHIN THEIR EXISTING EQUIPMENT, INCLUDING PPC.
5. TAP GENERATOR PANEL CIRCUIT TO LUGS ON T-TERMINALS (LOAD SIDE) WITH AUXILIARY TAP SCREW. TERMINATE CONDUCTOR ON EACH LUG WITH INSULATED RING TERMINAL PROPERLY SIZED.
6. EMERGENCY POWER OFF PUSHBUTTOM IN WEATHERPROOF ENCLOSURE FOR REMOTE SHUTDOWN OF GENERATOR ENCLOSURE. FURNISHED BY GENERATOR MANUFACTURER AND INSTALLED BY CONTRACTOR. CONNECT TO Y TERMINALS LOCATED NEAR TB2 VIA 2#18 AWG WIRES IN 1/2" LFMC.

1 ELECTRICAL ONE-LINE DIAGRAM

SCALE: NOT TO SCALE

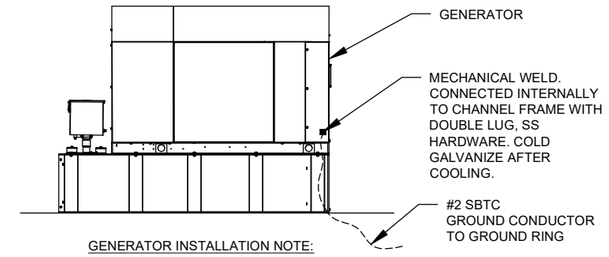

GENERATOR INSTALLATION NOTE:

INSTALL GENERATOR AND TRANSFER SWITCH WITH ALL SUPPLIED ACCESSORIES PER MANUFACTURER'S INSTALLATION INSTRUCTIONS AND SPECIFICATIONS. THIS INCLUDES, BUT IS NOT LIMITED TO, ACCESSORIES FOR THE EXHAUST SYSTEM, FUEL SYSTEM, ENCLOSURE INTEGRITY (CAPS, PLUGS, COVERS, ETC.), ELECTRICAL CONNECTIONS, AND GROUNDING CONNECTIONS.

2 GENERATOR GROUNDING

SCALE: NOT TO SCALE

DEMAND LOAD CALCULATION	
GENERATOR LOADS	2.5 KW
TENANT PANEL DEMAND LOADS	25.0 KW
TOTAL DEMAND LOADS (KW)	27.5 KW
TOTAL DEMAND CURRENT (A)	114.5 A
AT 120/240V, 1PH, 3W	

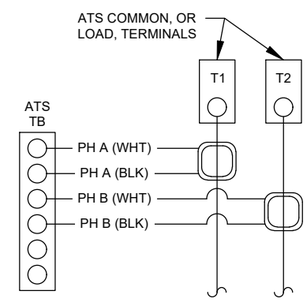

CT NOTES:

1. CT'S FURNISHED BY GENERATOR MANUFACTURER WITH LEAD WIRE OPTION, 200:1 AMP RATIO.
2. WIRING SHOWN FOR SINGLE PHASE TENANT LOAD ON PHASES A-B. ADJUST ACCORDINGLY FOR INDIVIDUAL SITES THAT ARE BALANCING THREE PHASE SERVICES.
3. 1-PHASE: MOUNT ONE CT WITH WHITE DOT FACING AWAY FROM, AND OTHER CT WITH WHITE DOT FACING TOWARDS, THE ATS TERMINAL CONNECTIONS
4. 3-PHASE: MOUNT ALL CT'S WITH WHITE DOTS ALL FACING AWAY FROM THE ATS TERMINAL CONNECTIONS

3 CT WIRING DIAGRAM

SCALE: NOT TO SCALE

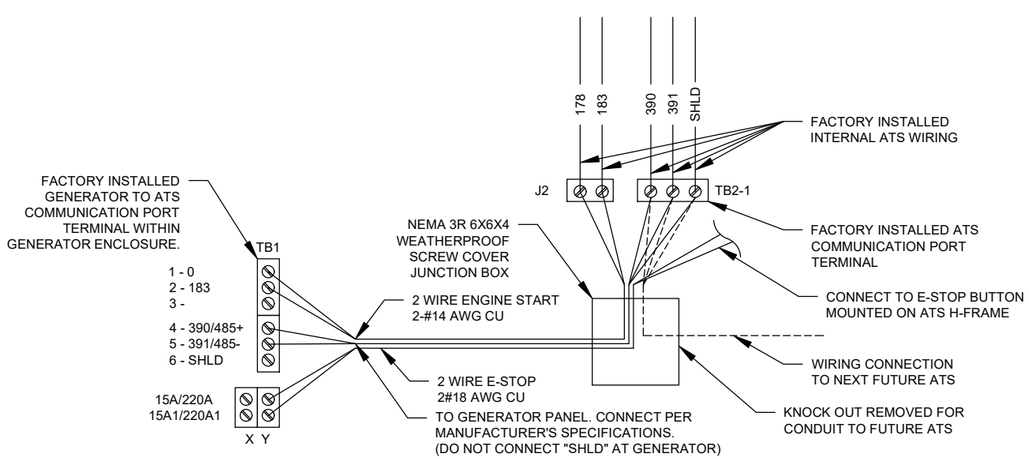

4 COMMUNICATIONS CABLE DETAIL

SCALE: NOT TO SCALE

NOTES:

1. INSTALL NETWORK OPERATING CENTER (NOC) MONITORING COMMUNICATION SYSTEM (RMC-700) ON MAIN UTILITY H-FRAME. THE RMC-700 IS FURNISHED BY ATC, COMPLETE WITH MOUNTING BRACKETS.
2. INSTALL EXTERNAL ANTENNA KIT (FURNISHED BY ATC). ANTENNA MOUNTS TO KENTROX ENCLOSURE OR MOUNTED TO H-FRAME. FEED CABLE THROUGH RMC-700 ENTRY PORT #3 AND CONNECT TO ANTENNA PORT TX/RX. HAND TIGHTEN ONLY. LEAVE POWER AND DATA CABLES IN RMC-700 UNCONNECTED FOR COMMISSIONING TEAM
3. BRANCH CIRCUIT WIRING FOR MONITORING DEVICE SHALL BE 2-#12 AWG CU, 1-#12 AWG CU G, IN 3/4" C.

5 PROPOSED MONITORING

SCALE: NOT TO SCALE

AMERICAN TOWER®
ATC TOWER SERVICES, LLC
3500 REGENCY PARKWAY
SUITE 100
CARY, NC 27518
PHONE: (919) 468-0112

REV.	DESCRIPTION	BY	DATE
0	FOR CONSTRUCTION	DB	02/03/21

ATC SITE NUMBER:

414615

ATC SITE NAME:

LA HONDA CA

SITE ADDRESS:
335 SEARS RANCH RD.
LA HONDA, CA 94020

SEAL:

REGISTERED PROFESSIONAL ENGINEER
MUSTAPHA RAHA
E-22655
ELECTRICAL
STATE OF CALIFORNIA

Expires: 03/2021
Authorized by "Scott Fletcher"
05 Feb 2021 07:17:47

DRAWN BY:	DB
APPROVED BY:	SRF
DATE DRAWN:	02/03/21
ATC JOB NO:	13335112_M4

ELECTRICAL ONE-LINE AND WIRING DETAILS

SHEET NUMBER:	REVISION:
E-601	0

GENERAC | INDUSTRIAL POWER

REMOTE EMERGENCY STOP SWITCH SURFACE MOUNT, H-PANEL

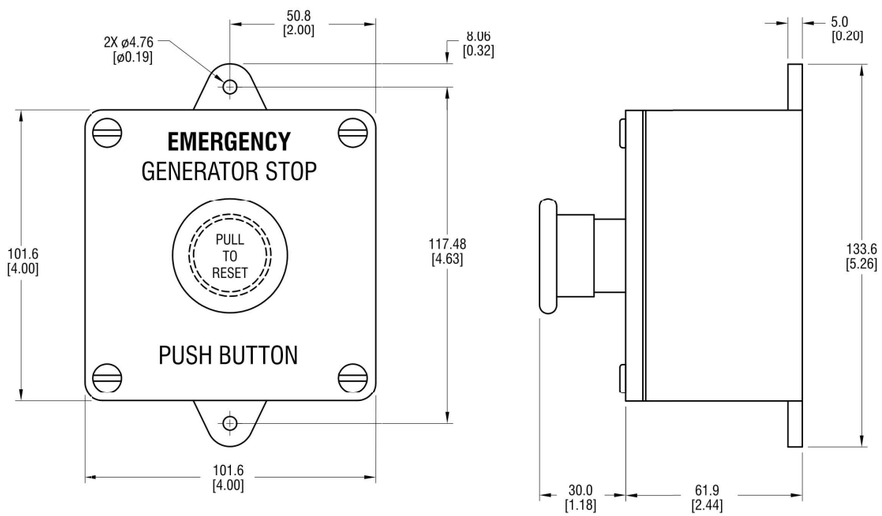

- MANUFACTURER: PILLA ELECTRICAL PRODUCTS, INC.
- MODEL SG120
- GENERAC PART NUMBER 061129E
- SURFACE MOUNT, NEMA 4X
- NONMETALLIC BACKBOX

DIMENSIONS: mm[INCHES]

GENSET CONTROLS

1 OF 2

GENERAC | INDUSTRIAL POWER

REMOTE EMERGENCY STOP SWITCH SURFACE MOUNT, H-PANEL

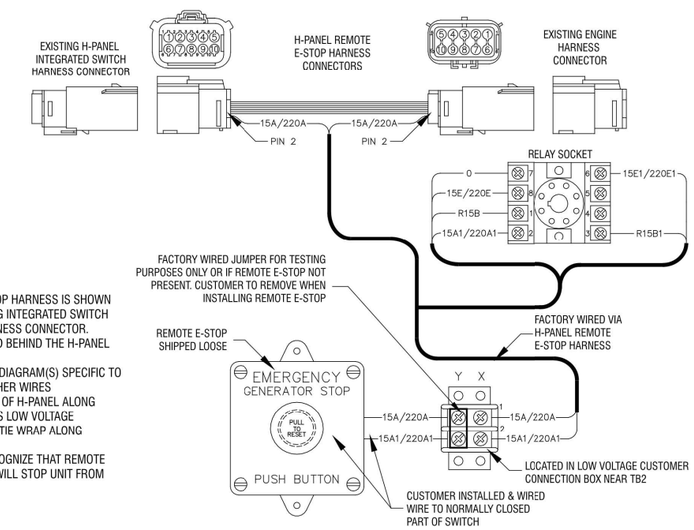

NOTES:
1) THE H-PANEL REMOTE E-STOP HARNESS IS SHOWN IN POSITION BETWEEN EXISTING INTEGRATED SWITCH CONNECTOR AND ENGINE HARNESS CONNECTOR. CONNECTION POINT IS LOCATED BEHIND THE H-PANEL HINGED COVER
2) SEE WIRING OR SCHEMATIC DIAGRAM(S) SPECIFIC TO UNIT FOR INFORMATION ON OTHER WIRES
3) FACTORY RUNS WIRING OUT OF H-PANEL ALONG ENGINE HARNESS THAT ENTERS LOW VOLTAGE CUSTOMER CONNECTION BOX. TIE WRAP ALONG HARNESS AS NEEDED.
4) THE H-PANEL WILL NOT RECOGNIZE THAT REMOTE E-STOP WAS ACTIVATED, BUT WILL STOP UNIT FROM RUNNING

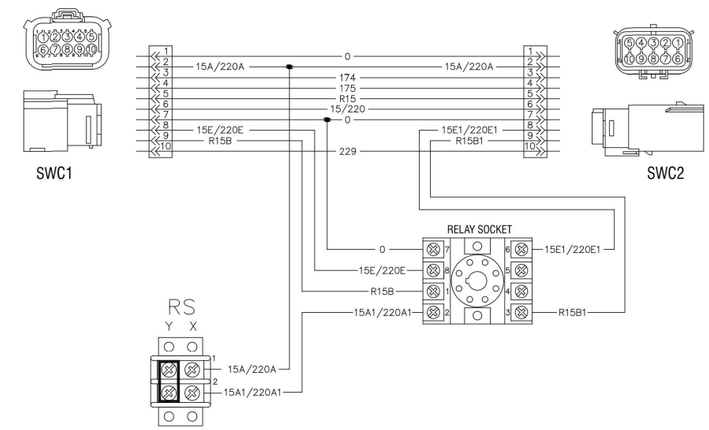

GENSET CONTROLS

2 OF 2

1 E-STOP SWITCH

SCALE: NOT TO SCALE

SUPPLEMENTAL

SHEET NUMBER:	REVISION:
R-601	0

SD080 | 4.5L | 80 kW

INDUSTRIAL DIESEL GENERATOR SET

EPA Certified Stationary Emergency

GENERAC | INDUSTRIAL POWER

STANDBY POWER RATING

80 kW, 100 kVA, 60 Hz

PRIME POWER RATING*

72 kW, 90 kVA, 60 Hz

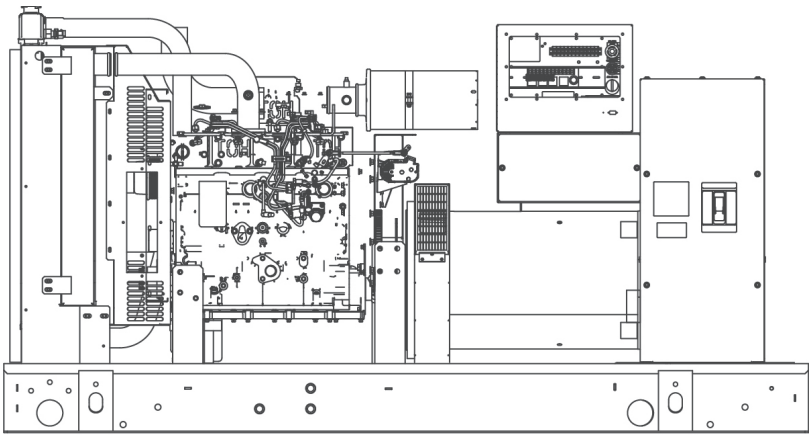

*Built in the USA using domestic and foreign parts

*EPA Certified Prime ratings are not available in the U.S. or its Territories.

**Certain options or customization may not hold certification valid.

Image used for illustration purposes only

CODES AND STANDARDS

Generac products are designed to the following standards:

UL2200, UL508, UL142, UL498

NFPA70, 99, 110, 37

NEC700, 701, 702, 708

ISO9001, 8528, 3046, 7637, Pluses #2b, 4

NEMA ICS10, MG1, 250, ICS6, AB1

ANSI C62.41

POWERING AHEAD

For over 50 years, Generac has led the industry with innovative design and superior manufacturing.

Generac ensures superior quality by designing and manufacturing most of its generator components, including alternators, enclosures and base tanks, control systems and communications software.

Generac's gensets utilize a wide variety of options, configurations and arrangements, allowing us to meet the standby power needs of practically every application.

Generac searched globally to ensure the most reliable engines power our generators. We choose only engines that have already been proven in heavy-duty industrial application under adverse conditions.

Generac is committed to ensuring our customers' service support continues after their generator purchase.

SD080 | 4.5L | 80 kW

INDUSTRIAL DIESEL GENERATOR SET

EPA Certified Stationary Emergency

GENERAC | INDUSTRIAL POWER

STANDARD FEATURES

ENGINE SYSTEM

General

- Oil Drain Extension
- Air Cleaner
- Fan Guard
- Stainless Steel flexible exhaust connection
- Critical Exhaust Silencer (enclosed only)
- Factory Filled Oil
- Radiator Duct Adapter (open set only)

Fuel System

- Fuel lockoff solenoid
- Primary fuel filter

Cooling System

- Closed Coolant Recovery System
- UV/Ozone resistant hoses
- Factory-Installed Radiator
- Radiator Drain Extension
- 50/50 Ethylene glycol antifreeze
- 120 VAC Coolant Heater

Engine Electrical System

- Battery charging alternator
- Battery cables
- Battery tray
- Solenoid activated starter motor
- Rubber-booted engine electrical connections

ALTERNATOR SYSTEM

- UL2200 GENprotect™
- 12 leads (3-phase, non 600 V)
- Class H insulation material
- Vented rotor
- 2/3 pitch
- Skewed stator
- Auxiliary voltage regulator power winding
- Amortisseur winding
- Brushless Excitation
- Sealed Bearings
- Automated manufacturing (winding, insertion, lacing, varnishing)
- Rotor dynamically spin balanced
- Full load capacity alternator
- Protective thermal switch

GENERATOR SET

- Internal Genset Vibration Isolation
- Separation of circuits - high/low voltage
- Separation of circuits - multiple breakers
- Silencer Heat Shield
- Wrapped Exhaust Piping
- Silencer housed in discharge hood (enclosed only)
- Standard Factory Testing
- 2 Year Limited Warranty (Standby rated Units)
- 1 Year Limited Warranty (Prime rated Units)
- Silencer mounted in the discharge hood (enclosed only)

ENCLOSURE (IF SELECTED)

- Rust-proof fasteners with nylon washers to protect finish
- High performance sound-absorbing material
- Gasketed doors
- Stamped air-intake louvers
- Air discharge hoods for radiator-upward pointing
- Stainless steel lift off door hinges
- Stainless steel lockable handles
- Rhino Coat™ - Textured polyester powder coat

TANKS (IF SELECTED)

- UL 142
- Double wall
- Vents
- Sloped top
- Sloped bottom
- Factory pressure tested (2 psi)
- Rupture basin alarm
- Fuel level
- Check valve in supply and return lines
- Rhino Coat™- Textured polyester powder coat
- Stainless hardware

CONTROL SYSTEM

Control Panel

- Digital H Control Panel - Dual 4x20 Display
- Programmable Crank Limiter
- 7-Day Programmable Exerciser
- Special Applications Programmable PLC
- RS-232/485
- All-Phase Sensing DVR
- Full System Status
- Utility Monitoring
- Low Fuel Pressure Indication
- 2-Wire Start Compatible
- Power Output (kW)
- Power Factor
- kW Hours, Total & Last Run
- Real/Reactive/Apparent Power
- All Phase AC Voltage
- All Phase Currents
- Oil Pressure
- Coolant Temperature
- Coolant Level
- Engine Speed
- Battery Voltage
- Frequency
- Date/Time Fault History (Event Log)
- Isochronous Governor Control
- Waterproof/sealed Connectors
- Audible Alarms and Shutdowns
- Not in Auto (Flashing Light)
- Auto/Off/Manual Switch
- E-Stop (Red Mushroom-Type)
- NFPA110 Level I and II (Programmable)
- Customizable Alarms, Warnings, and Events
- Modbus protocol
- Predictive Maintenance algorithm
- Sealed Boards
- Password parameter adjustment protection
- Single point ground
- 15 channel data logging
- 0.2 msec high speed data logging
- Alarm information automatically comes up on the display

Alarms

- Oil Pressure (Pre-programmable Low Pressure Shutdown)
- Coolant Temperature (Pre-programmed High Temp Shutdown)
- Coolant Level (Pre-programmed Low Level Shutdown)
- Low Fuel Pressure Alarm
- Engine Speed (Pre-programmed Over speed Shutdown)
- Battery Voltage Warning
- Alarms & warnings time and date stamped
- Alarms & warnings for transient and steady state conditions
- Snap shots of key operation parameters during alarms & warnings
- Alarms and warnings spelled out (no alarm codes)

SD080 | 4.5L | 80 kW

INDUSTRIAL DIESEL GENERATOR SET

EPA Certified Stationary Emergency

GENERAC | INDUSTRIAL POWER

CONFIGURABLE OPTIONS

ENGINE SYSTEM

General

- O Oil Heater
- O Industrial Exhaust Silencer

Fuel System

- O Flexible fuel lines
- O Primary fuel filter

Engine Electrical System

- O 10A UL battery charger
- O 2.5A UL battery charger
- O Battery Warmer

ALTERNATOR SYSTEM

- O Alternator Upsizing
- O Anti-Condensation Heater
- O Tropical coating
- O Permanent Magnet Excitation

CIRCUIT BREAKER OPTIONS

- O Main Line Circuit Breaker
- O 2nd Main Line Circuit Breaker
- O Shunt Trip and Auxiliary Contact
- O Electronic Trip Breaker

GENERATOR SET

- O Gen-Link Communications Software (English Only)
- O IBC Seismic Certification
- O 8 Position Load Center
- O 2 Year Extended Warranty
- O 5 Year Warranty
- O 5 Year Extended Warranty

ENCLOSURE

- O Weather Protected
- O Level 1 Sound Attenuation
- O Level 2 Sound Attenuation
- O Steel Enclosure
- O Aluminum Enclosure
- O 150 MPH Wind Kit
- O 12 VDC Enclosure Lighting Kit
- O 120 VAC Enclosure Lighting Kit
- O AC/DC Enclosure Lighting Kit
- O Door Alarm Switch

TANKS (Size on last page)

- O Electrical Fuel Level
- O Mechanical Fuel Level
- O 8” Fill Extension
- O 13” Fill Extension
- O 19” Fill Extension

CONTROL SYSTEM

- O 21-Light Remote Annunciator
- O Remote Relay Panel (8 or 16)
- O Oil Temperature Sender with Indication Alarm
- O Remote E-Stop (Break Glass-Type, Surface Mount)
- O Remote E-Stop (Red Mushroom-Type, Surface Mount)
- O Remote E-Stop (Red Mushroom-Type, Flush Mount)
- O Remote Communication - Modem
- O Remote Communication - Ethernet
- O 10A Run Relay
- O Ground Fault Indication and Protection Functions

ENGINEERED OPTIONS

ENGINE SYSTEM

- O Coolant heater ball valves
- O Block Heaters
- O Fluid containment pans

ALTERNATOR SYSTEM

- O 3rd Breaker Systems

CONTROL SYSTEM

- O Spare inputs (x4) / outputs (x4) - H Panel Only
- O Battery Disconnect Switch

GENERATOR SET

- O Special Testing

ENCLOSURE

- O Motorized Dampers
- O Door switched for intrusion alert
- O Enclosure ambient heaters

TANKS

- O Overfill Protection Valve
- O UL2085 Tank
- O ULC S-601 Tank
- O Stainless Steel Tank
- O Special Fuel Tanks (MIDEQ and FL DEP/DERM, etc.)
- O Vent Extensions

RATING DEFINITIONS

Standby - Applicable for a varying emergency load for the duration of a utility power outage with no overload capability.

Prime - Applicable for supplying power to a varying load in lieu of utility for an unlimited amount of running time. A 10% overload capacity is available for 1 out of every 12 hours. The Prime Power option is only available on International applications. Power ratings in accordance with ISO 8528-1, Second Edition

SD080 | 4.5L | 80 kW

INDUSTRIAL DIESEL GENERATOR SET

EPA Certified Stationary Emergency

GENERAC | INDUSTRIAL POWER

APPLICATION AND ENGINEERING DATA

ENGINE SPECIFICATIONS

General

Make	Iveco/FPT
EPA Emissions Compliance	Stationary Emergency
EPA Emissions Reference	See Emissions Data Sheet
Cylinder #	4
Type	In-Line
Displacement - L (cu In)	4.5 (274.6)
Bore - mm (in)	105 (4.1)
Stroke - mm (in)	132 (5.2)
Compression Ratio	17.5:1
Intake Air Method	Turbocharged/Aftercooled
Cylinder Head Type	2 Valve
Piston Type	Aluminium
Crankshaft Type	Forged Steel

Engine Governing

Governor	Electronic Isochronous
Frequency Regulation (Steady State)	+/- 0.25%

Lubrication System

Oil Pump Type	Gear
Oil Filter Type	Full Flow
Crankcase Capacity - L (qts)	13.6 (14.4)

Cooling System

Cooling System Type	Closed
Water Pump	Belt Driven Centrifugal
Fan Type	Pusher
Fan Speed (rpm)	2538
Fan Diameter mm (in)	660.4 (26)
Coolant Heater Wattage	1500
Coolant Heater Standard Voltage	120 V /240 V

Fuel System

Fuel Type	Ultra Low Sulfur Diesel Fuel
Fuel Specifications	ASTM
Fuel Filtering (microns)	5
Fuel Injection	Stanadyne
Fuel Pump Type	Engine Driven Gear
Injector Type	Mechanical
Fuel Supply Line mm (in)	12.7 (0.5) NPT
Fuel Return Line mm (in)	12.7 (0.5) NPT

Engine Electrical System

System Voltage	12 VDC
Battery Charging Alternator	20 A
Battery Size	See Battery Index 0161970SBY
Battery Voltage	12 VDC
Ground Polarity	Negative

ALTERNATOR SPECIFICATIONS

Standard Model	390
Poles	4
Field Type	Revolving
Insulation Class - Rotor	H
Insulation Class - Stator	H
Total Harmonic Distortion	<3%
Telephone Interference Factor (TIF)	<50

Standard Excitation	Synchronous Brushless
Bearings	One-Pre Lubed & Sealed
Coupling	Direct, Flexible Disc
Load Capacity - Standby	100%
Prototype Short Circuit Test	Yes
Voltage Regulator Type	Digital
Number of Sensed Phases	3
Regulation Accuracy (Steady State)	±0.25%

SD080 | 4.5L | 80 kW

INDUSTRIAL DIESEL GENERATOR SET

EPA Certified Stationary Emergency

GENERAC® | INDUSTRIAL POWER

OPERATING DATA

POWER RATINGS

		Standby	
Single-Phase 120/240 VAC @1.0pf	80 kW	Amps:	333
Three-Phase 120/208 VAC @0.8pf	80 kW	Amps:	278
Three-Phase 120/240 VAC @0.8pf	80 kW	Amps:	241
Three-Phase 277/480 VAC @0.8pf	80 kW	Amps:	120
Three-Phase 346/600 VAC @0.8pf	80 kW	Amps:	96

STARTING CAPABILITIES (sKVA)

sKVA vs. Voltage Dip

		480 VAC						208/240 VAC					
Alternator	kW	10%	15%	20%	25%	30%	35%	10%	15%	20%	25%	30%	35%
Standard	80	59	88	117	147	176	205	44	66	88	110	132	154
Upsize 1	100	79	118	157	197	236	275	59	89	118	148	177	206
Upsize 2	130	116	174	232	290	348	406	87	131	174	218	261	305

FUEL CONSUMPTION RATES*

Fuel Pump Lift - ft (m)	Diesel - gal/hr (l/hr) Percent Load	Standby
3 (1)	25%	2.1 (7.9)
	50%	3.7 (14.0)
Total Fuel Pump Flow (Combustion + Return)	75%	5.2 (19.7)
13.6 gal/hr	100%	6.3 (23.8)

* Fuel supply installation must accommodate fuel consumption rates at 100% load.

COOLING

		Standby
Coolant Flow per Minute	gal/min (l/min)	32.7 (123.8)
Coolant System Capacity	gal (L)	4.5 (17.44)
Heat Rejection to Coolant	BTU/hr	232,270
Inlet Air	cfm (m^3/hr)	6360 (180)
Max. Operating Radiator Air Temp	F° (C°)	122 (50)
Max. Ambient Temperature (before derate)	F° (C°)	104 (40)
Maximum Radiator Backpressure	in H_2O	0.5

COMBUSTION AIR REQUIREMENTS

		Standby
Flow at Rated Power	cfm (m^3/min)	306 (8.67)

ENGINE

		Standby
Rated Engine Speed	rpm	1800
Horsepower at Rated kW**	hp	131
Piston Speed	ft/min (m/min)	1559 (475)
BMEP	psi	210

** Refer to "Emissions Data Sheet" for maximum bHP for EPA and SCAQMD permitting purposes.

EXHAUST

		Standby
Exhaust Flow (Rated Output)	cfm (m^3/min)	782 (22.14)
Max. Backpressure (Post Silencer)	inHg (Kpa)	1.5 (5.1)
Exhaust Temp (Rated Output)	°F (°C)	887 (475)
Exhaust Outlet Size (Open Set)	mm (in)	76.2 (3.0)

Deration – Operational characteristics consider maximum ambient conditions. Derate factors may apply under atypical site conditions.
Please consult a Generac Power Systems Industrial Dealer for additional details. All performance ratings in accordance with ISO3046, BS5514, ISO8528 and DIN6271 standards.

Notes:
1. CONTROL PANEL, (OPTIONAL BATTERY CHARGER INSIDE).
2. 120V, 20A GFCI & 250V, 15A OUTLET (OPTIONAL).
3. CONNECTION POINTS FOR CONTROL WIRES PROVIDED IN THE LOW VOLTAGE CONNECTION BOX (USE LOW VOLTAGE STUB-UP AREA).
4. BATTERY (12 VOLT NEGATIVE GROUND SYSTEM).
5. MAIN LINE CIRCUIT BREAKER (MLCB), AC LOAD LEADS. (DIMENSIONS MAY VARY DUE TO UNIT CONFIGURATION)
6. CENTER OF GRAVITY AND WEIGHT MAY CHANGE DUE TO UNIT OPTIONS.

7. ENGINE SERVICE CONNECTIONS:
   INLET NATURAL GAS = N/A
   INLET DIESEL = 1/2" NPT COUPLING
   RETURN DIESEL = 1/2" NPT COUPLING
   OIL DRAIN = 1/2" NPT COUPLING
   RADIATOR DRAIN = N/A
   FLEX PIPE OUTLET = 3" I.D.
   EXHAUST OUTLET = N/A

***** SEE GENERATOR SIZING GUIDE FOR FUEL PIPE SIZING TO SUIT APPLICATION *****

8. AUXILARY AC CONNECTION FOR UNIT OPTIONS ARE LOCATED IN HIGH VOLTAGE CONNECTION BOX, UNLESS AN OPTIONAL LOAD CENTER IS INSTALLED.
9. EXHAUST PIPES MAY BE ROTATED TO ALLOW MUFFLER TO POINT OUT TO THE RIGHT OR LEFT SIDE OF GENERATOR. (MAY NOT APPLY TO ALL UNITS)
10. GENERATOR SET MUST BE INSTALLED SUCH THAT FRESH COOLING AIR IS AVAILABLE AND DISCHARGE AIR FROM THE RADIATOR IS NOT RECIRCULATED.
11. BOTTOM OF GENERATOR SET MUST BE ENCLOSED TO PREVENT PEST INTRUSION AND RECIRCULATION OF DISCHARGE AIR AND/OR IMPROPER COOLING AIR FLOW.
12. INSTALL EXHAUST BLANKETS ALONG THIS LINE.
13. CONNECT THE OPEN SET EXHAUST PER NFPA 37
14. BOLTS OR STUDS USED TO MOUNT UNIT TO PAD, OR BASE TANK, SHALL BE 5/8"-11 GRADE 5. USE STANDARD SAE TORQUE SPECS. (FOR INSTALLATION OF FUEL TANK TO PAD REFER TO INSTALL DRAWING OF THE BASE TANK)

ADDITIONAL NOTES:
FOR WEIGHT AND CENTER OF GRAVITY DATA SEE NOTE 6, AND SHEET 3.

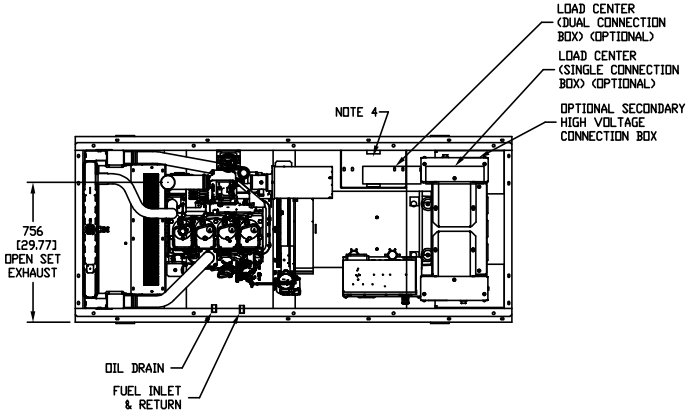

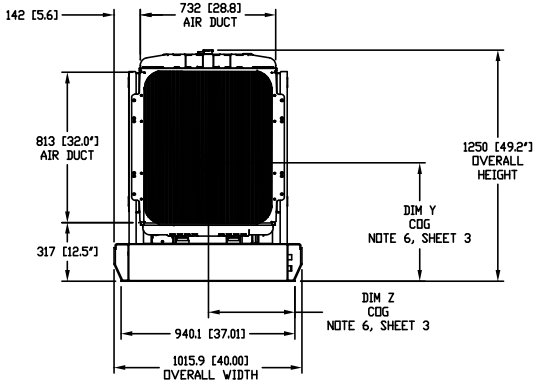

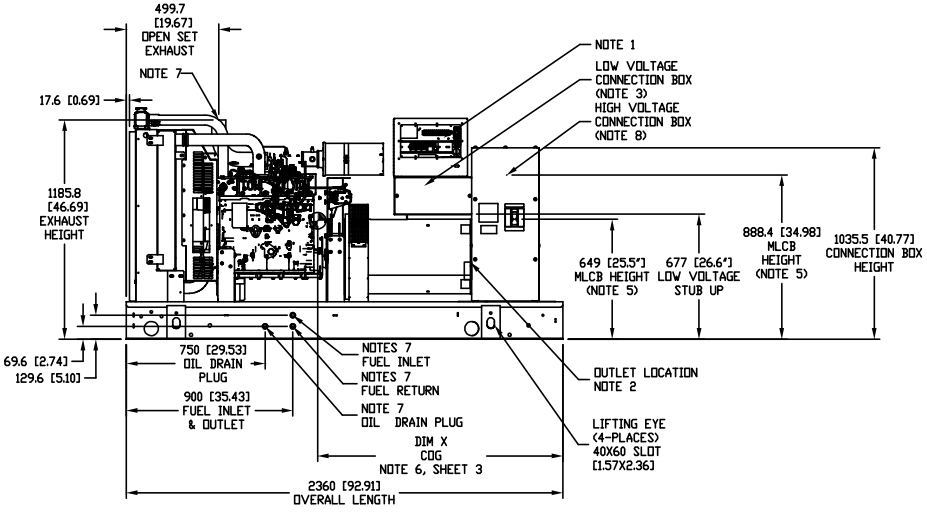

DIMENSIONS ARE IN MILLIMETERS [INCHES]

DRAWING CREATED FROM PRO/ENGINEER 3D FILE. ECO MODIFICATION TO BE APPLIED TO SOLID MODEL ONLY.

INSTALLATION DRAWING

ELECTRONICALLY APPROVED
INSIDE WINDCHILL

GENERAC

TITLE
OPEN SET
D4.5L, 60HZ: SD080, PD072
SD060, PD054

ISSUE DATE: 6/2/14

SIZE	CAGE NO	DWG NO	REV
B	N/A	0J4189	E
SCALE 0.035	WT-KG	SHEET 1 of 3	

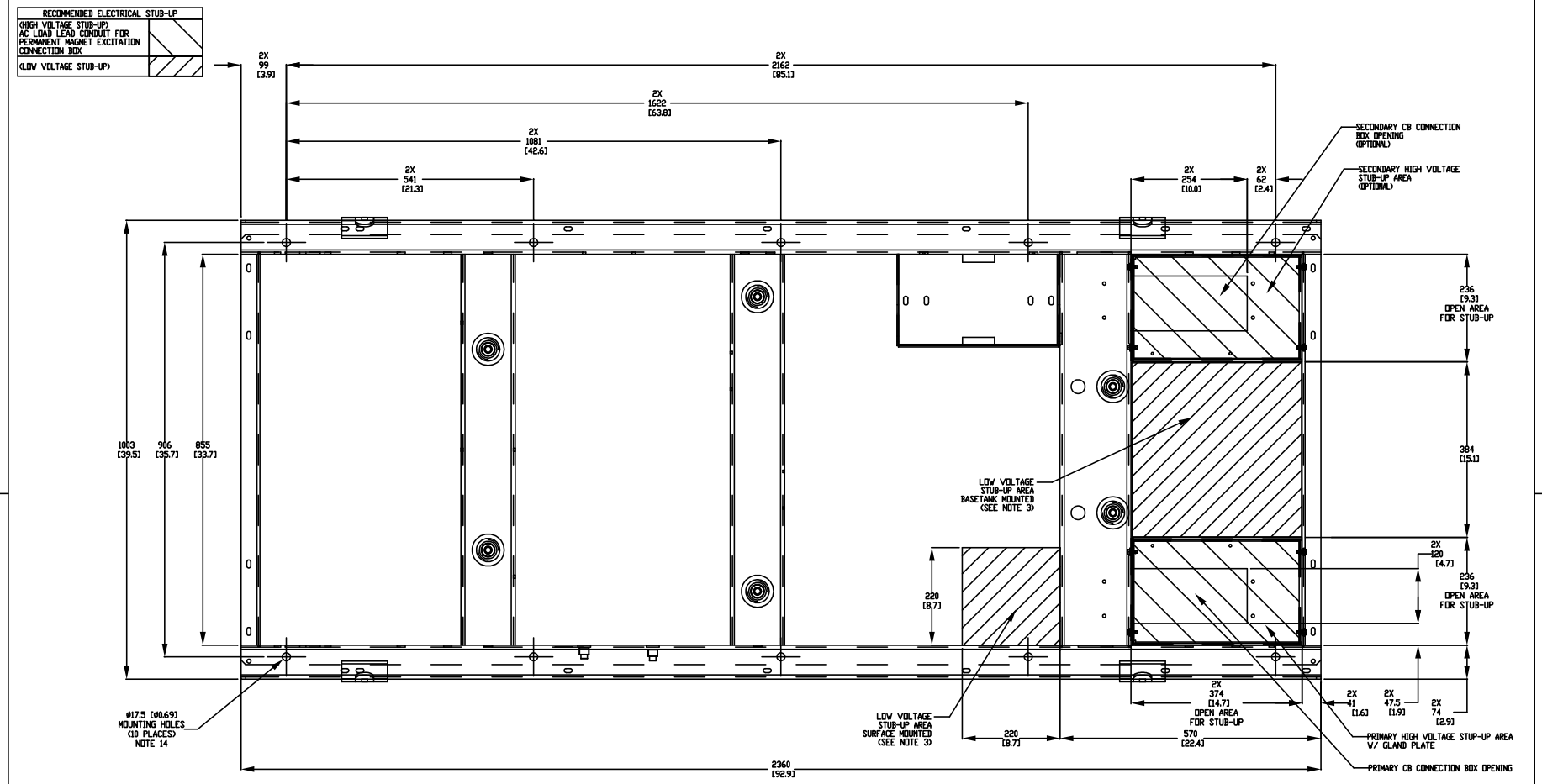

DRAWING CREATED FROM PRO/ENGINEER 3D FILE. ECO MODIFICATION TO BE APPLIED TO SOLID MODEL ONLY.

DIMENSIONS ARE IN MILLIMETERS [INCHES]

INSTALLATION DRAWING

ELECTRONICALLY APPROVED
INSIDE WINDCHILL

GENERAC

TITLE
STUB-UP VIEW
D4.5L, 60HZ: SD080, PD072
SD060, PD054

ISSUE DATE: 6/2/14

SIZE	CAGE NO	DWG NO	REV
B	N/A	0J4189	F
SCALE 0.120	WT-KG		SHEET 2 of 3

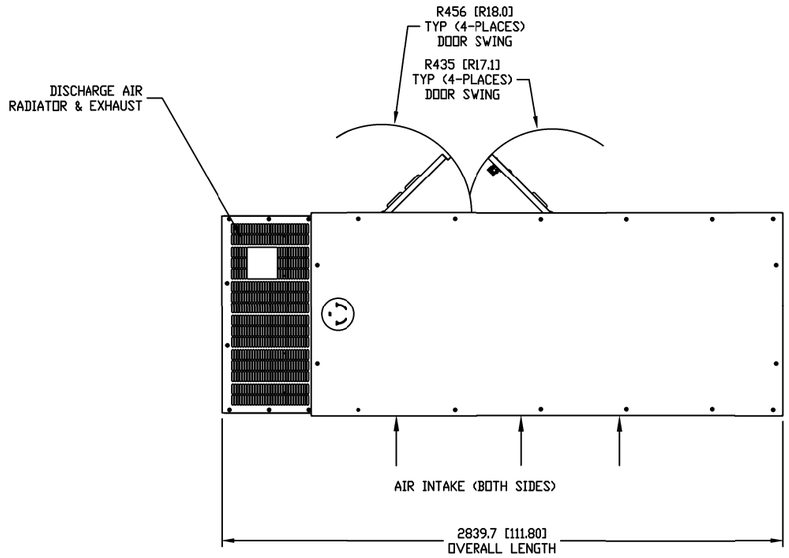

FOR ALL STUB-UP, WEIGHT, AND COG DETAILS, SEE CORRESPONDING OPEN SET DRAWING PER UNIT CONFIGURATION.

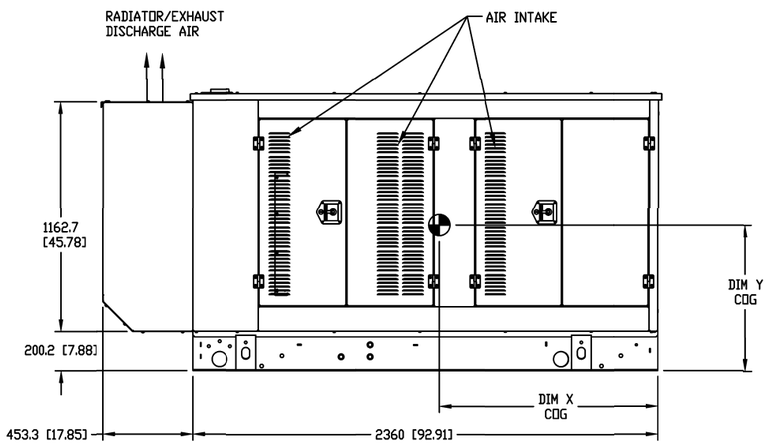

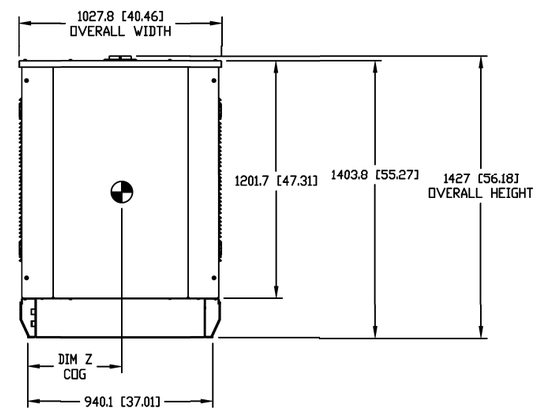

DIMENSIONS ARE IN MILLIMETERS [INCHES]

DRAWING CREATED FROM PRO/ENGINEER 3D FILE. ECO MODIFICATION TO BE APPLIED TO SOLID MODEL ONLY.

INSTALLATION DRAWING

ELECTRONICALLY APPROVED
INSIDE WINDCHILL

GENERAC

TITLE
STD ENCLOSURE
D4.5L, 60HZ: SD080, PD072
SD060, PD054

ISSUE DATE: 6/2/14

SIZE	CAGE NO	DWG NO	REV
B	N/A	0J4189A	D

SCALE 0.035 | WT-KG | SHEET 1 of 1

SH	REV	WINDCHILL VERSION
1/1	A	A.3

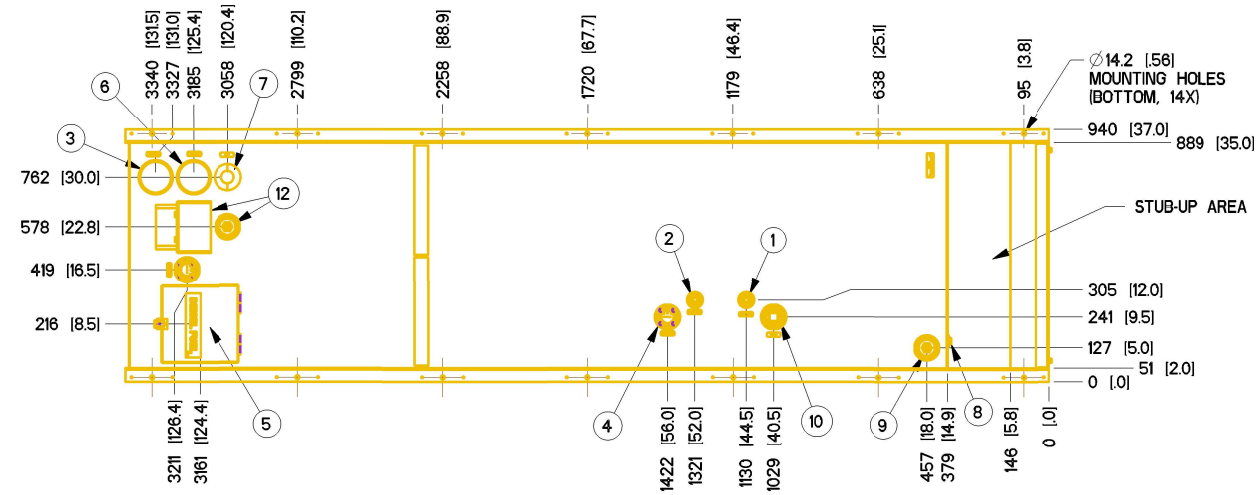

ITEM #	TANK FITTING	FUNCTION:
1	1/2" NPT COUPLING	FUEL SUPPLY
2	1/2" NPT COUPLING	FUEL RETURN
3	4" NPT WELD FLANGE	EMERGENCY VENT (OUTER)
4	FUEL SENSOR	FUEL LEVEL
5	2" NPT COUPLING	FUEL FILL
6	4" NPT WELD FLANGE	EMERGENCY VENT (INNER)
7	2" NPT WELD FLANGE	VENT
8	1/2" NPT FITTING	DRAIN
9	2" NPT WELD FLANGE	LEAK DETECTOR
10	2" NPT WELD FLANGE	SPARE, CUST. USE
11		5 GAL SPILL CONTAINER
12		90% LEVEL ALARM AND SENSOR
13	2" NPT WELD FLANGE	OVERFILL PREVENTION VALVE

TANK P/N - REVISION	10000018810
TOTAL TANK CAPACITY	1764 ltr [466 gal]
USABLE TANK CAPACITY	1722 ltr [455 gal]
DRY WEIGHT	681 kg [1501 lbs]

NOTE:
1. DIMENSIONS ARE IN MILLIMETERS [INCHES]
2. UL #142 LISTED

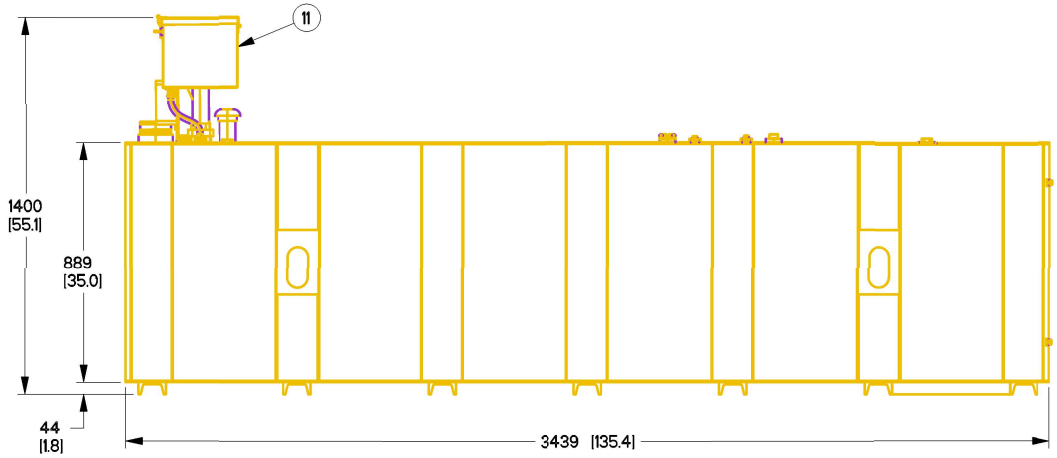

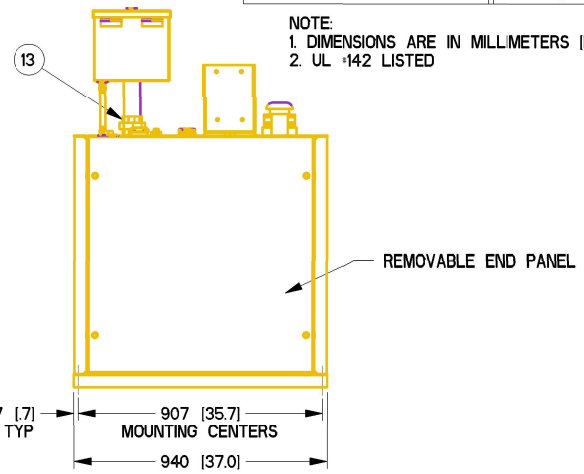

MOUNTING BOLTS/STUDS FOR BASETANK TO MOUNTING SURFACE SHALL BE .50"-11 GRADE 5 (USE STANDARD SAE TORQUE SPECS)

DRAWING CREATED FROM PRO/ENGINEER 3D FILE. ECO MODIFICATION TO BE APPLIED TO SOLID MODEL ONLY.

INSTALLATION DRAWING

ELECTRONICALLY APPROVED
INSIDE WINDCHILL

GENERAC

TITLE
BASETANK
455G USEABLE / 466G TOTAL
D4.5F.I. B-GROUP

ISSUE DATE: 07/21/17

SIZE	CAGE NO	DWG NO	REV
B	N/A	10000018795	A
SCALE 0.055	WT-KG 0.000	SHEET 1 of 1	

STATEMENT OF EXHAUST EMISSIONS
2018 FPT DIESEL FUELED GENERATOR

The measured emissions values provided here are proprietary to Generac and it's authorized dealers. This information may only be disseminated upon request, to regulatory governmental bodies for emissions permitting purposes or to specifying organizations as submittal data when expressly required by project specifications, and shall remain confidential and not open to public viewing. This information is not intended for compilation or sales purposes and may not be used as such, nor may it be reproduced without the expressed written permission of Generac Power Systems, Inc. The data provided shall not be meant to include information made public by Generac.

Generator Model:	**SD080**	EPA Certificate Number:	**JFPXL06.7DGB-002**
kW_e Rating:	**80**	CARB Certificate Number:	**Not Applicable**
Engine Family:	**JFPXL06.7DGB**	SCAQMD CEP Number:	**511714**
Engine Model:	**F4GE9485A*J**	Emission Standard Category:	**Tier 3**
Rated Engine Power (BHP)*:	**131**	Certification Type:	**Stationary Emergency CI**
Fuel Consumption (gal/hr)*:	**6.84**		**(40 CFR Part 60 Subpart IIII)**
Aspiration:	**Turbo/Aftercooled**		
Rated RPM:	**1800**		

*Engine Power and Fuel Consumption are declared by the Engine Manufacturer of Record and the U.S. EPA.

Emissions based on engine power of specific Engine Model.
(These values are actual composite weighted exhaust emissions results over the EPA 5-mode test cycle.)

CO	NOx + NMHC	PM	
0.90	**3.80**	**0.16**	Grams/kW-hr
0.70	**2.80**	**0.12**	Grams/bhp-hr

- The stated values are actual exhaust emission test measurements obtained from an engine representative of the type described above.
- Values based on 5mode testing are official data of record as submitted to regulatory agencies for certification purposes. Testing was conducted in accordance with prevailing EPA protocol, which is typically accepted by SCAQMD and other regional authorities.
- No emissions values provided above are to be construed as guarantees of emission levels for any given Generac generator unit.
- Generac Power Systems, Inc. reserves the right to revise this information without prior notice.
- Consult state and local regulatory agencies for specific permitting requirements.
- The emission performance data supplied by the equipment manufacturer is only one element required toward completion of the permitting and installation process. State and local regulations may vary on a case-by-case basis and local agencies must be consulted by the permit application/equipment owner prior to equipment purchase or installation. The data supplied herein by Generac Power Systems cannot be construed as a guarantee of installability of the generating set.

	UNITED STATES ENVIRONMENTAL PROTECTION AGENCY **2018 MODEL YEAR** **CERTIFICATE OF CONFORMITY** **WITH THE CLEAN AIR ACT**	**OFFICE OF TRANSPORTATION** **AND AIR QUALITY** **ANN ARBOR, MICHIGAN 48105**

Certificate Issued To: FPT Industrial S.p.A. (U.S. Manufacturer or Importer) **Certificate Number: JFPXL06.7DGB-002**	**Effective Date:** **08/15/2017** **Expiration Date:** **12/31/2018**	**Byron J. Bunker, Division Director** **Compliance Division**	**Issue Date:** **08/15/2017** **Revision Date:** **N/A**

Model Year: 2018 **Manufacturer Type:** Original Engine Manufacturer **Engine Family:** JFPXL06.7DGB	**Mobile/Stationary Indicator:** Stationary **Emissions Power Category:** 75<=kW<130 **Fuel Type:** Diesel **After Treatment Devices:** No After Treatment Devices Installed **Non-after Treatment Devices:** No Non-After Treatment Devices Installed

Pursuant to Section 111 and Section 213 of the Clean Air Act (42 U.S.C. sections 7411 and 7547) and 40 CFR Part 60, and subject to the terms and conditions prescribed in those provisions, this certificate of conformity is hereby issued with respect to the test engines which have been found to conform to applicable requirements and which represent the following engines, by engine family, more fully described in the documentation required by 40 CFR Part 60 and produced in the stated model year.

This certificate of conformity covers only those new compression-ignition engines which conform in all material respects to the design specifications that applied to those engines described in the documentation required by 40 CFR Part 60 and which are produced during the model year stated on this certificate of the said manufacturer, as defined in 40 CFR Part 60.

It is a term of this certificate that the manufacturer shall consent to all inspections described in 40 CFR 1068 and authorized in a warrant or court order. Failure to comply with the requirements of such a warrant or court order may lead to revocation or suspension of this certificate for reasons specified in 40 CFR Part 60. It is also a term of this certificate that this certificate may be revoked or suspended or rendered void *ab initio* for other reasons specified in 40 CFR Part 60.

This certificate does not cover engines sold, offered for sale, or introduced, or delivered for introduction, into commerce in the U.S. prior to the effective date of the certificate.

The actual engine power may lie outside the limits of the Emissions Power Category shown above. See the certificate application for details.

COUNTY OF SAN MATEO - PLANNING AND BUILDING DEPARTMENT

ATTACHMENT E

Lawrence Behr Associates INC
www.lbagroup.com

NIER Study Report

SITE NAME:

414615 La Honda CA

LOCATION:

La Honda, California

COMPANY:

American Tower Corporation
Woburn, Massachusetts

August 5th, 2020

3400 Tupper Drive | Greenville, NC 27834
252-757-0279 | 800-522-4464 | lbagrp@lbagroup.com

Contents

DISCLAIMER NOTICE

This work is based upon our best interpretation of available information. However, these data and their interpretation are constantly changing. Therefore, we do not warrant that any undertaking based on this report will be successful, or that others will not require further research or actions in support of this proposal or future undertaking. In the event of errors, our liability is strictly limited to replacement of this document with a corrected one. Liability for consequential damages is specifically disclaimed. Any use of this document constitutes an agreement to hold Lawrence Behr Associates, Inc. and its employees harmless and indemnify it for any and all liability, claims, demands, and litigation expenses and attorney's fees arising out of such use.

Work product documents released prior to account settlement remain the sole property of Lawrence Behr Associates, Inc. and must be returned on demand. Underlying work notes and data relating to this document remain the property of Lawrence Behr Associates, Inc. This document shall not be reproduced in whole or part without permission of Lawrence Behr Associates, Inc. Any dispute hereunder shall be adjudicated in North Carolina. Any use or retention of this document constitutes acceptance of these terms, the entire work product, and all charges associated therewith.

NIER STUDY REPORT

414615 La Honda CA

La Honda, California

INTRODUCTION

Lawrence Behr Associates, Inc. (LBA) has been retained by American Tower Corporation (ATC) of Woburn, Massachusetts to evaluate the RF emissions of an existing tower at this location.

SITE AND FACILITY CONSIDERATIONS

Site 414615 La Honda CA is located at 415 Sears Ranch Road in La Honda, California at coordinates 37.32262, -122.27918. The support structure is an 80' stealth monopine. The installation consists of two antenna levels with radiation centers of 60' and 77' above ground level. It should be noted that Verizon, at 77', has no transmit antennas. All antennae will have a radiation center as described above. All data used in this study was provided by one or more of the following sources:

1. ATC furnished data
2. Compiled from carrier and manufacturer standard configurations
3. Empirical data collected by LBA

A topographic map of the study area is located in Appendix 1. A satellite view of the study area is located in Appendix 2.

The load list may be seen in Appendix 3.

POWER DENSITY CALCULATIONS

Graphs of the power density at different distances from the transmitter, compared to FCC MPE general population and occupational limits, may be seen in Appendix 4. These limits are based upon the Information Relating to MPE Standards found in Appendix 6. Study methodology may be seen in Appendix 7, which describes the Non-Ionizing Radiation Prediction Models. Approximate radiation patterns may be found in Appendix 5. This site ***IS*** in compliance with FCC OET-65 MPE limits.

August 5th, 2020

Kathryn G. Tesh
Wireless Services Manager

APPENDIX 1 *Topographic Map*

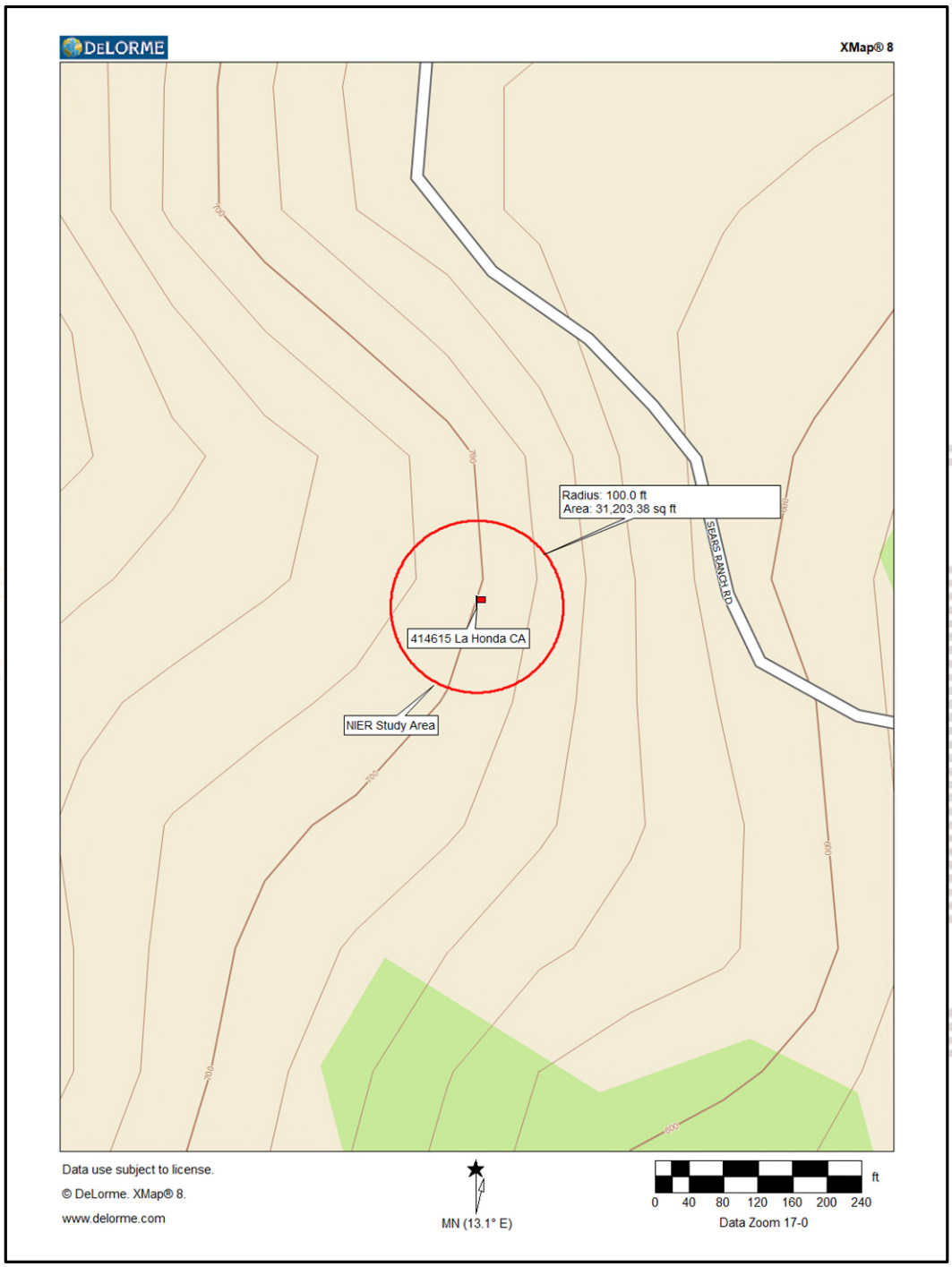

APPENDIX 2 *Satellite Photo*

APPENDIX 3 *Load List*

Proposed	Customer	RAD Height (ft)	Equipment Quantity	Equipment Type	Manufacturer	Model Number	Line Quantity	Line size	Mount Type	Azimuths	TX Frequency	RX Frequency
No	VERIZON WIRELESS	77	6	PANEL	Generic	72" x 12" Panel	18	7/8" Coax	T-Arm	120/240		
No	T-MOBILE	60	3	PANEL	Commscope	LNX-6515DS-VTM			T-Arm	20/140/260		
No	T-MOBILE	60	3	PANEL	Ericsson	AIR 21, 1.3M, B4A B2P (90.4 lbs)			T-Arm	20/140/260	1735-1755	2135-2155

APPENDIX 4

FCC OET-65 MPE Limit Study

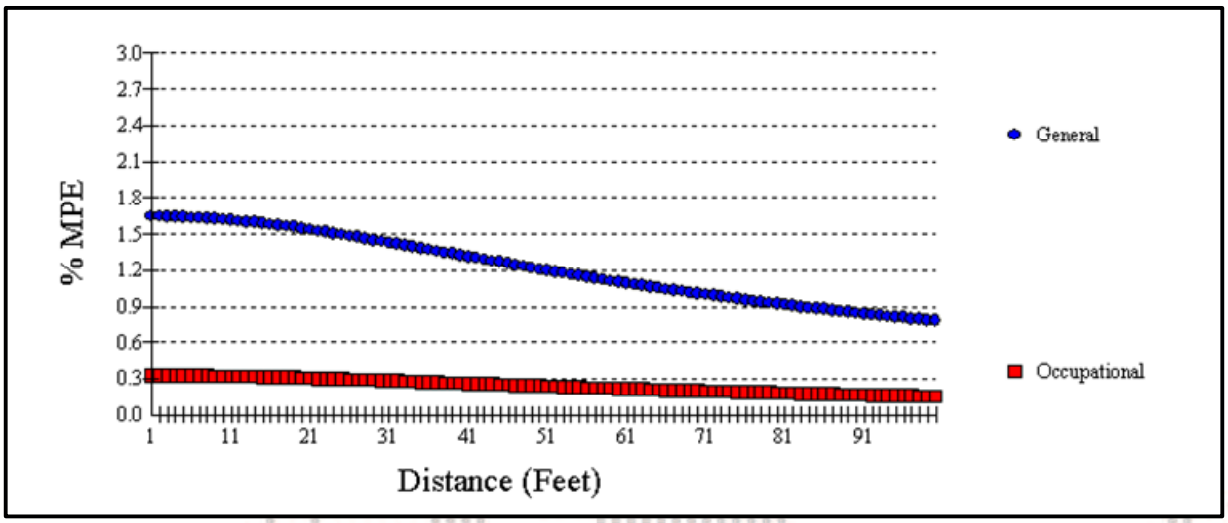

General Population MPE (@1'):	1.65%
Occupational MPE (@1'):	0.33%
Maximum Power Density (@1'):	0.0165 mW/cm²

APPENDIX 5

Tower Radiation Patterns

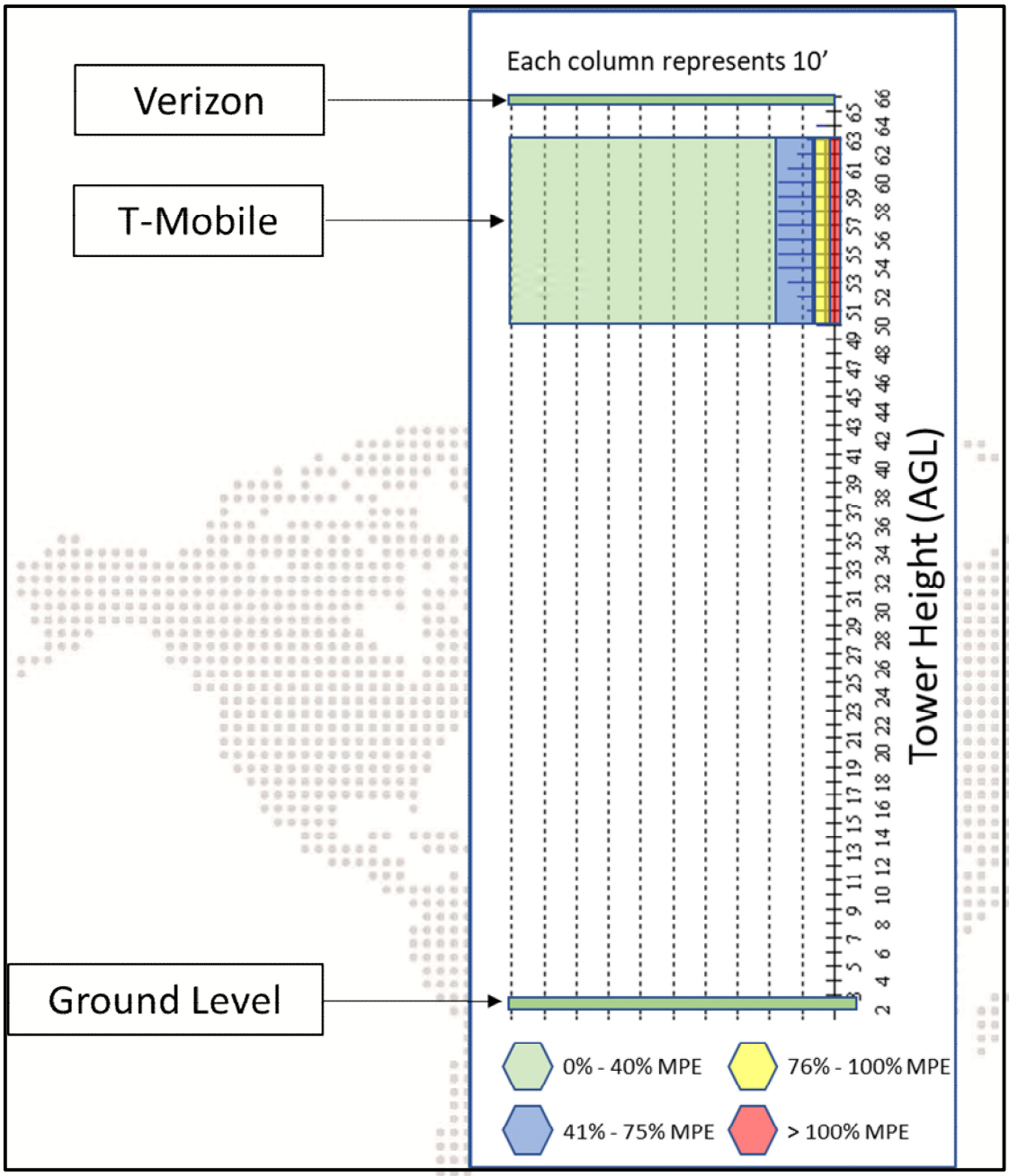

APPENDIX 6 *Information Pertaining to MPE Studies*

In 1985, the FCC first adopted guidelines to be used for evaluating human exposure to RF emissions. The FCC revised and updated these guidelines on August 1, 1996, as a result of a rule-making proceeding initiated in 1993. The new guidelines incorporate limits for Maximum Permissible Exposure (MPE) in terms of electric and magnetic field strength and power density for transmitters operating at frequencies between 300 kHz and 100 GHz.

The FCC's MPE limits are based on exposure limits recommended by the National Council on Radiation Protection and Measurements (NCRP) and, over a wide range of frequencies, the exposure limits were developed by the Institute of Electrical and Electronics Engineers, Inc., (IEEE) and adopted by the American National Standards Institute (ANSI) to replace the 1982 ANSI guidelines. Limits for localized absorption are based on recommendations of both ANSI/IEEE and NCRP.

The FCC's limits, and the NCRP and ANSI/IEEE limits on which they are based, are derived from exposure criteria quantified in terms of specific absorption rate (SAR). The basis for these limits is a whole-body averaged SAR threshold level of 4 watts per kilogram (4 W/kg), as averaged over the entire mass of the body, above which expert organizations have determined that potentially hazardous exposures may occur. The MPE limits are derived by incorporating safety factors that lead, in some cases, to limits that are more conservative than the limits originally adopted by the FCC in 1985. Where more conservative limits exist, they do not arise from a fundamental change in the RF safety criteria for whole-body averaged SAR, but from a precautionary desire to protect subgroups of the general population who, potentially, may be more at risk.

The FCC exposure limits are also based on data showing that the human body absorbs RF energy at some frequencies more efficiently than at others. The most restrictive limits occur in the frequency range of 30-300 MHz where whole-body absorption of RF energy by human beings is most efficient. At other frequencies, whole-body absorption is less efficient, and consequently, the MPE limits are less restrictive.

MPE limits are defined in terms of power density (units of milliwatts per centimeter squared: mW/cm^2), electric field strength (units of volts per meter: V/m) and magnetic field strength (units of amperes per meter: A/m). The far-field of a transmitting antenna is where the electric field vector (E), the

magnetic field vector (H), and the direction of propagation can be considered to be all mutually orthogonal ("plane-wave" conditions).

Occupational/controlled exposure limits apply to situations in which persons are exposed as a consequence of their employment and in which those persons who are exposed have been made fully aware of the potential for exposure and can exercise control over their exposure. Occupational/controlled exposure limits also apply where exposure is of a transient nature as a result of incidental passage through a location where exposure levels may be above general population/uncontrolled limits (see below), as long as the exposed person has been made fully aware of the potential for exposure and can exercise control over his or her exposure by leaving the area or by some other appropriate means.

General population/uncontrolled exposure limits apply to situations in which the general public may be exposed or in which persons who are exposed as a consequence of their employment may not be made fully aware of the potential for exposure or cannot exercise control over their exposure. Therefore, members of the general public would always be considered under this category when exposure is not employment-related, for example, in the case of a telecommunications tower that exposes persons in a nearby residential area. Additional details can be found in FCC OET 65.

APPENDIX 7 *MPE Standards Methodology*

This study predicts RF field strength and power density levels that emanate from communications system antennae. It considers all transmitter power levels (less filter and line losses) delivered to each active transmitting antenna at the communications site. Calculations are performed to determine power density and MPE levels for each antenna as well as composite levels from all antennas. The calculated levels are based on where a human (Observer) would be standing at various locations at the site. The point of interest where the MPE level is predicted is based on the height of the Observer.

Compliance with the FCC limits on RF emissions are determined by spatially averaging a person's exposure over the projected area of an adult human body, that is approximately six-feet or two-meters, as defined in the ANSI/IEEE C95.1 standard. The MPE limits are specified as time-averaged exposure limits. This means that exposure is averaged over an identifiable time interval. It is 30 minutes for the general population/uncontrolled RF environment and 6 minutes for the occupational/controlled RF environment. However, in the case of the general public, time averaging should not be applied because the general public is typically not aware of RF exposure and they do not have control of their exposure time. Therefore, it should be assumed that any RF exposure to the general public will be continuous.

The FCC's limits for exposure at different frequencies are shown in the following Tables.

Limits for Occupational/Controlled Exposure				
Frequency Range (MHz)	**Electric Field Strength (E) (V/m)**	**Magnetic Field Strength (H) (A/m)**	**Power Density (S) (mW/cm²)**	**Averaging Time |E|², |H|² or S (minutes)**
0.3 - 3.0	614	1.63	100*	6
3.0 - 30	1842/f	4.89/f	$900/F^2$	6
30 - 300	61.4	0.163	1.0	6
300 - 1500	--	--	f/300	6
1500 - 100,000	--	--	5	6

f = frequency

* = Plane-wave equivalent power density

Occupational/controlled limits apply in situations in which persons are exposed as a consequence of their employment provided those persons are fully aware of the potential for exposure and can exercise control over their exposure. Limits for occupational/controlled exposure also apply in situations when an individual is transient through a location where occupational/controlled limits apply provided he or she is made aware of the potential for exposure.

Limits for General Population/Uncontrolled Exposure				
Frequency Range (MHz)	**Electric Field Strength (E) (V/m)**	**Magnetic Field Strength (H) (A/m)**	**Power Density (S) (mW/cm^2)**	**Averaging Time $\|E\|^2$, $\|H\|^2$ or S (minutes)**
0.3 - 1.34	614	1.63	100*	30
1.34 - 30	824/f	2.19/f	$180/F^2$	30
30 -300	27.5	0.073	0.2	30
300 -1500	--	--	f/1500	30
1500 -100,000	--	--	1.0	30

f = frequency
* = Plane-wave equivalent power density

General population/uncontrolled exposures apply in situations in which the general public may be exposed or in which persons that are exposed as a consequence of their employment may not be fully aware of the potential for exposure or cannot exercise control over their exposure.

It is important to understand that these limits apply cumulatively to all sources of RF emissions affecting a given area. For example, if several different communications system antennas occupy a shared facility such as a tower or rooftop, then the total exposure from all systems at the facility must be within compliance of the FCC guidelines.

The field strength emanating from an antenna can be estimated based on the characteristics of an antenna radiating in free space. There are basically two field areas associated with a radiating antenna. When close to the antenna, the region is known as the Near Field. Within this region, the characteristics of the RF fields are very complex and the wave front is extremely curved. As you move further from the antenna, the wave front has less curvature and becomes planar. The wave front still has a curvature but it appears to occupy a flat plane in space (plane-wave radiation). This region is known as the Far Field.

Two models are utilized to predict Near and Far field power densities. They are based on the formulae in FCC OET 65. As this study is concerned only with Near Field calculations, we will only describe the model used for this study. For additional details, refer to FCC OET Bulletin 65.

Cylindrical Model (Near Field Predictions)

Spatially averaged plane-wave equivalent power densities parallel to the antenna may be estimated by dividing the antenna input power by the surface area of an imaginary cylinder surrounding the length of the radiating antenna. While the actual power density will vary along the height of the antenna, the average value along its length will closely follow the relation given by the following equation:

$$S = P \div 2\pi RL$$

Where:
S = Power Density
P = Total Power into antenna
R = Distance from the antenna
L = Antenna aperture length

For directional-type antennas, power densities can be estimated by dividing the input power by that portion of a cylindrical surface area corresponding to the angular beam width of the antenna. For example, for the case of a 120-degree azimuthal beam width, the surface area should correspond to 1/3 that of a full cylinder. This would increase the power density near the antenna by a factor of three over that for a purely omni-directional antenna. Mathematically, this can be represented by the following formula:

$$S = (180 / \theta_{BW}) P \div \pi RL$$

Where:
S = Power Density
θ_{BW} = Beam width of antenna in degrees (3 dB half-power point)
P = Total Power into antenna
R = Distance from the antenna
L = Antenna aperture length

If the antenna is a 360-degree omni-directional antenna, this formula would be equivalent to the previous formula.

Spherical Model (Far Field Predictions)

Spatially averaged plane-wave power densities in the Far Field of an antenna may be estimated by considering the additional factors of antenna gain and reflective waves that would contribute to exposure.

The radiation pattern of an antenna has developed in the Far Field region and the power gain needs to be considered in exposure predictions. Also, if the vertical radiation pattern of the antenna is considered, the exposure predictions would most likely be reduced significantly at ground level, resulting in a more realistic estimate of the actual exposure levels.

Additionally, to model a truly "worst case" prediction of exposure levels at or near a surface, such as at ground-level or on a rooftop, reflection off the surface of antenna radiation power can be assumed, resulting in a potential four-fold increase in power density.

These additional factors are considered and the Far Field prediction model is determined by the following equation:

$$S = EIRP \times Rc \div 4\pi R^2$$

Where:
S = Power Density
EIRP = Effective Radiated Power from antenna
Rc = Reflection Coefficient (2.56)
R = Distance from the antenna

The EIRP includes the antenna gain. If the antenna pattern is considered, the antenna gain is relative based on the horizontal and vertical pattern gain values at that particular location in space, on a rooftop or on the ground. However, it is recommended that the antenna radiation pattern characteristics not be considered to provide a conservative "worst case" prediction. This is the equation is utilized for the Far Field exposure predictions herein.

COUNTY OF SAN MATEO - PLANNING AND BUILDING DEPARTMENT

ATTACHMENT F


335
VERIZON
NOTICE
GENERAC

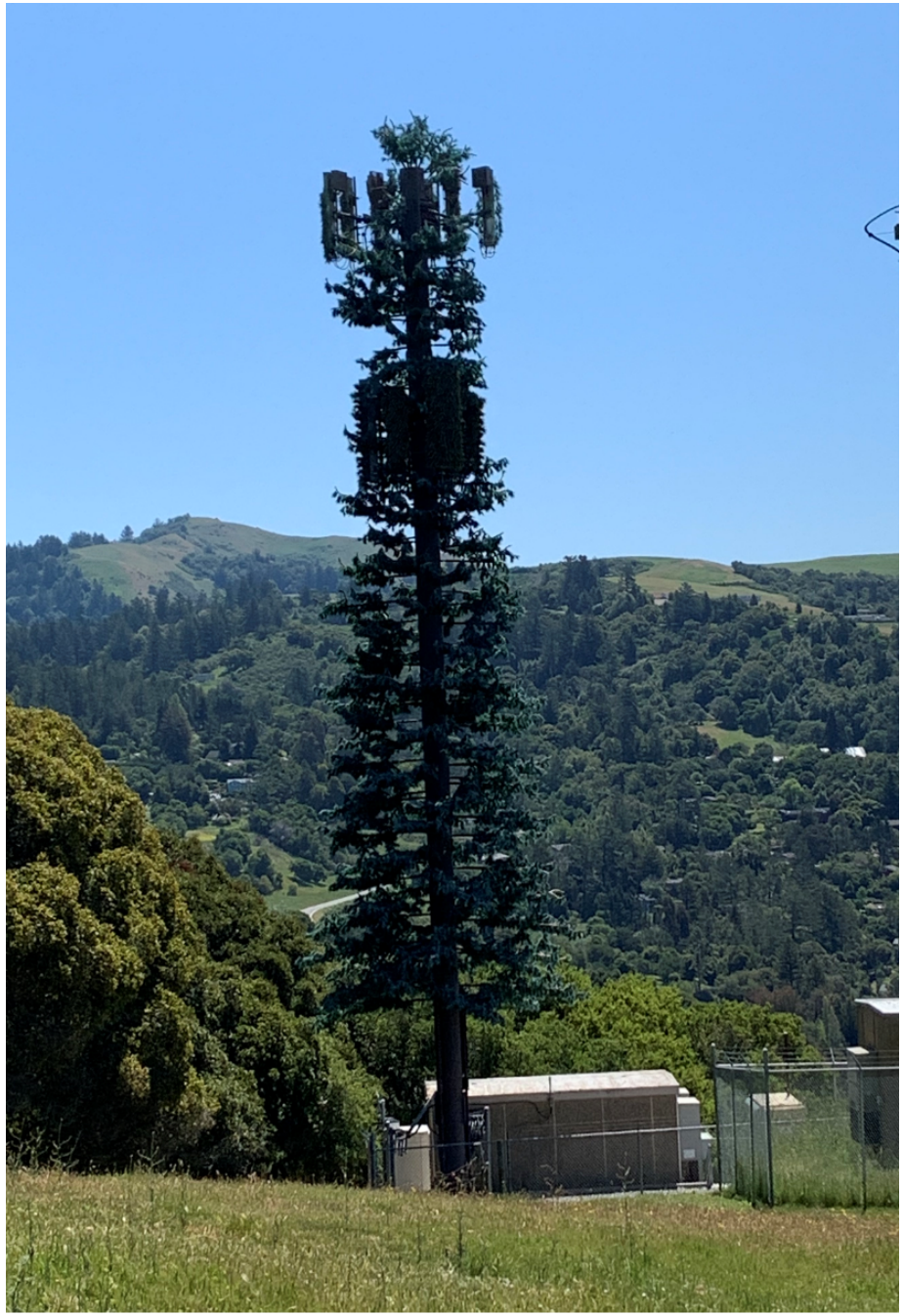


GENERAC

Existing Generator

Existing equipment shed